Bulletin 194R Next Generation Global Fused and Non-Fused Disconnects

- 20 A…63 A Sizes
- Fused switch versions:
  - BS88 - DIN
  - CSA HRCII-C - CSA HRCI-MISC
  - UL Class J - UL Class CC
  - NFC
- Non-fused switches
- Operating handle ingress ratings:
  - IP42 (Type 1)
  - IP66 (Type 3R, 3, 12, 4, 4X)
- Handle with or without test mode
- Padlockable handle for up to three padlocks
- Up to 6 auxiliary contacts can be added per switch
- Suitable as service entrance disconnecting means (UL 98)
- Suitable as at-motor disconnecting means (UL 508)

Certifications

UL Listed (File No. E 14841, Guide NLRV; File No. E 47426, Guide WHTY)
CSA Certified (File No. LR1234)
CE

Table of Contents

Standards Compliance

IEC 60947/EN60947-3
BS EN60947-3
VDE 0660
CSA 22.2 No. 4
NEMA KS-1
UL 98
UL 508

2

The Bulletin 194R line of fused and non-fused global disconnect switches provides the flexibility to meet worldwide applications. These rod-operated disconnect switches incorporate removable fuse carriers that have high short circuit protection ratings. The disconnect switches are UL Listed and CSA Certified and are designed to meet IEC 60947-3, VDE, DIN, BS and applicable NEMA requirements.

Product Selection — Open Switches

Cat. No. Explanation

194R-J30-1753

194R – J 30 –1753 S
a b c d

a

Fuse Type	
Code	Description
C	UL Class CC, CSA Type HRCI-MISC (30 A)
J	UL Class J, CSA Type HRCI-J (30 A or 60 A)
H	CSA Type HRCII-C (30 A or 60 A)
B	BS88 (20 A, 32 A, or 63 A)
D	DIN (32 A or 63 A)
F	NFC (25 A, 32 A, or 63 A)
N	Non-fused (30 A or 60 A)

b

Load Size		
Code	Description	Dimensional Ref.
20	20 A (BS88)	A1
25	25 A (NFC)	A1
30	30 A (CC, J, HRCI-J)	A1
	30 A (Non-Fused) ❄	A2
	30 A (HRCII-C)	B1
32	32 A (BS88, NFC)	A1
	32 A (DIN)	B1
60	60 A (J, HRCI-J, HRCII-C)	B1
60	60 A (Non-Fused) ❄	B2
63	63 A (BS88, DIN, NFC)	B1

∗ See page 2-420 for dimensional reference data.
❄ Non-fused disconnect switches must use separately installed fuses for upstream short-circuit protection

c

No. of Poles	
Code	Description
1753	3-pole switch

d

Fuse Indication	
Code	Configuration
Blank	No fuse status indication
S	Fuse status indication

Limit of 6 total auxiliary contact blocks total for test and standard positions.
Fourth pole, additional auxiliary contacts and handle options available in accessory section.

UL/CSA Fused Disconnect Switches

Cat. No. 194R-J30-1753

Rated Current [A]	Maximum Hp Ratings ∗							Fuse	Dim. Ref.	Cat. No.
	1Ø (60 Hz)		3Ø (60 Hz)			DC				
	120V	240V	240V	480V	600V	125V	250V			
UL Class CC and CSA HRCI-MISC Fuses										
30	2	3	7.5	15	20	3	5	30 A CC, HRCI-Misc	A1	**194R-C30-1753**
UL Class J and CSA HRCI-J Fuses										
30	2	3	7.5	15	20	3	5	30 A Class J, HRCI-J	A1	**194R-J30-1753**
60	3	10	15	30	50	5	10	60 A Class J, HRCI-J	B1	**194R-J60-1753**
CSA HRCII-C Fuses										
30	2	3	7.5	15	20	3	5	30A HRCII-C	B1	194R-H30-1753
60	3	10	15	30	50	5	10	60A HRCII-C	B1	194R-H60-1753

∗ Time delay fuses may be required to utilize the disconnect switch at its maximum horsepower rating.

Non-Fused Disconnect Switches

194R-N30-1753

Fuse Description	Rated Current∗ [A]	Non-Fused Maximum Hp Ratings							Dim. Ref.	Cat. No.
		1Ø (60 Hz)		3Ø (60 Hz)			DC			
		120V	240V	240V	480V	600V	125V	250V		
Non-fused disconnect switches must use separately installed fuses for upstream short circuit protection.	30	2	3	7.5	15	20	3	5	A2	194R-N30-1753
	60	3	10	15	30	40	5	10	B2	**194R-N60-1753**

∗ 30 A UL-rated device has I_{the} of 40 A per IEC. 60 A UL-rated device has I_{the} of 80 A per IEC.

IEC Fused Disconnect Switches

194R-F63-1753

194R-F32-1753

BS88 Fused Disconnect Switches

Load Rating I_e [A]	Ratings (AC23) With Fuse Links 3Ø Maximum kW (50 Hz) 200/230V	380/400/415V	660/690V	Fuse	Dim. Ref.	Cat. No.
20	5.5	11	15	BS88 A1	A1	194R-B20-1753
32	9	18.5	30	BS88 A2	A1	194R-B32-1753
63	18.5	30	55	BS88 A3	B1	194R-B63-1753

DIN Fused Disconnect Switches

Load Rating I_e [A]	Ratings (AC23) With Fuse Links 3Ø Maximum kW (50 Hz) 200/230V	380/400/415V	660/690V	Fuse	Dim. Ref.	Cat. No.
32	9	18.5	30	NH 000	B1	194R-D32-1753
63	18.5	30	55	NH 000	B1	194R-D63-1753

NFC Fused Disconnect Switches

Load Rating I_e [A]	Ratings (AC23) With Fuse Links 3Ø Maximum kW (50 Hz) 200/230V	380/400/415V	660/690V	Fuse	Dim. Ref.	Cat. No.
25	7.5	11	22	NFC 14x51 mm	A1	194R-F25-1753
32	9	18.5	30	NFC 14x51 mm	A1	194R-F32-1753
63	18.5	30	55	NFC 22x58 mm	B1	194R-F63-1753

Accessories

4th Pole Modules

Rated Current [A]	Maximum Hp Ratings✶ 1Ø (60 Hz) 120V	1Ø (60 Hz) 240V	3Ø (60 Hz) 240V	3Ø (60 Hz) 480V	3Ø (60 Hz) 600V	DC 125V	DC 250V	Fuse	Dim. Ref.	Cat. No.
Non-Fused										
30❄	2	3	7.5	15	20	3	5	—	A2	**194R-30-NN**
60‡	3	10	15	30	40	5	10	—	B2	**194R-60-NN**
UL Class CC and CSA HRCI-MISC Fuses										
30	2	3	7.5	15	20	3	5	30 A CC, HRCI-Misc	A1	**194R-30-NC**
UL Class J and CSA HRCI-J Fuses										
30	2	3	7.5	15	20	3	5	30 A J, HRCI-J	A1	**194R-30-NJ**
60	3	10	15	30	50	5	10	60 A J, HRCI-J	B1	**194R-60-NJ**
CSA HRCII-C Fuses										
30	2	3	7.5	15	20	—	—	30A HRCII-C	B1	194R-30-NH
60	3	10	15	30	50	—	—	60A HRCII-C	B1	194R-60-NH

✶ Time delay fuses may be required to utilize the disconnect at its maximum horsepower rating.
❄ 30 A UL, 40 A IEC
‡ 60 A UL, 80 A IEC

BS88 Fuses

Load Rating I_e [A]	Ratings (AC23) With Fuse Links 3Ø Maximum kW (50 Hz) 200/230V	380/400/415V	660/690V	Fuse	Dim. Ref.	Cat. No.
20	5.5	11	15	BS88 A1	A1	194R-20-NB
32	9	18.5	30	BS88 A2	A1	194R-32-NB
63	18.5	30	55	BS88 A3	B1	194R-63-NB

DIN Fuses

Load Rating I_e [A]	Ratings (AC23) With Fuse Links 3Ø Maximum kW (50 Hz) 200/230V	380/400/415V	660/690V	Fuse	Dim. Ref.	Cat. No.
32	9	18.5	30	NH 000	B1	194R-32-ND
63	18.5	30	55	NH 000	B1	194R-63-ND

NFC Fuses

Load Rating I_e [A]	Ratings (AC23) With Fuse Links 3Ø Maximum kW (50 Hz) 200/230V	380/400/415V	660/690V	Fuse	Dim. Ref.	Cat. No.
25	7.5	11	22	NFC 14 x 51 mm	A1	194R-25-NF
32	9	18.5	30	NFC 14 x 51 mm	A1	194R-32-NF
63	18.5	30	55	NFC 22 x 58 mm	B1	194R-63-NF

Operating Handles (Accepts 3 Padlocks)

For Use With	Description	Color	Degree of Protection	Cat. No.
A1, A2, B1, B2	Test mode handle **with** defeater	Black	(Type 3R, 3, 12, 4, 4X) IP66	194R-HST4
		Red/Yellow	(Type 3R, 3, 12, 4, 4X) IP66	194R-HST4E
A1, A2, B1, B2	Standard handle test mode **with** defeater	Black	(Type 1) IP42	**194R-HS1**
			(Type 3R, 3, 12, 4, 4X) IP66	**194R-HS4**
		Red/Yellow	(Type 1) IP42	**194R-HS1E**
			(Type 3R, 3, 12, 4, 4X) IP66	**194R-HS4E**
	Standard handle **without** defeater	Black	(Type 1) IP42	**194R-HS1-N2**
			(Type 3R, 3, 12, 4, 4X) IP66	**194R-HS4-N2**
		Red/Yellow	(Type 1) IP42	**194R-HS1E-N2**
			(Type 3R, 3, 12, 4, 4X) IP66	**194R-HS4E-N2**

OSHA Lockout/Tag Out Compliance (LOTO)

OSHA CFR36 Section 1910 mandates that disconnects be able to be locked out while in the OFF position during servicing. All Bulletin 194R handles comply with this important safety requirement.

(Please see NFPA Article 430 for disconnect requirements of motor applications)

Operating Shafts

Disconnect Switch Dim. Ref.	Operating Shaft Type	Operating Shaft Length Approx. Dim. mm (in.)	Enclosure Working Depth: Disconnect Switch Dim. Ref.	Enclosure Working Depth: Minimum Approx. Dim. mm (in.)	Enclosure Working Depth: Maximum Approx. Dim. mm (in.)	Cat. No.
A1, A2, B1, B2	Standard Length	263 (10.3)	A1, B1	148 (5.8)	260 (10.2)	**194R-R1**
			A2, B2	111 (4.4)	260 (10.2)	
	Extended Length	457 (18.0)	A1, B1	148 (5.8)	454 (17.8)	**194R-R2**
			A2, B2	111 (4.4)	454 (17.8)	

NFPA 79 Operating Shaft/Handle Kits

An internal handle that permits operation of the disconnect switch when the panel door is open, in compliance with NFPA 79.

	Description	Shaft Length [mm (in.)]	Disconnect Switch Dim Ref.	Pkg. Qty.	Cat. No.
	**NFPA 79 Handle Kit** Includes NFPA 79 handle, operating shaft, and Cat. No. 194R-PLA1 padlocking attachment	305 (12)	A1, A2, B1, B2	1	**194R-NHR1**
		533 (21)	A1, A2, B1, B2	1	**194R-NHR2**

Other Accessories

	Description	Disconnect Switch Dim Ref.	Pkg. Qty.	Cat. No.
	**Operating Shaft Guide** — Allows easier coupling of shaft to operating handle if misalignment occurs between switch and enclosure after assembly installation	A1, A2, B1, B2	1	**194R-HSG1**
	**Shaft Guard** — Provides extra protection against contact with shaft	A1, A2, B1, B2	1	194R-R1G
	**Operating Shaft Coupler** — Used with Cat. Nos. 194R-R1 and 194R-R2 shafts to extend shaft length an additional 4.75 in.	A1, A2, B1, B2	1	**194R-SC1**
	**Operating Handle Instruction Label** — Describes the function of the operating handle for opening the enclosure door with the disconnect switch in the ON and OFF position	ALL	10	**194R-L1**

Replacement Mounting Hardware

	Pkg. Qty.	Description	For Use With	Cat. No.
	2	1 set screw, 1 shaft clip, and 2 #8 M4 screws	A1, A2	**194R-30-HDWR**
	4	1 set screw, 1 shaft clip, and 4 #8 M4 screws	B1, B2	**194R-60-HDWR**

Replacement Fuse Hardware

Description	For Use With	Pkg. Qty.	Cat. No.
M4 x .7 Fuse screws	194R BS88 Fuse Types	2	**194R-BS88-M4**
M5 x .6 Fuse screws	194R BS88 Fuse Types	2	**194R-BS88-M5**

Terminal Shields

	Description	Disconnect Switch Dim Ref.	Quantity Required Per Disconnect Switch	Pkg. Qty.	Cat. No.
	**30 A Terminal Shield (3 terminals)**	A1, A2	2	2	**194R-30-C3**
	60 A Terminal Shield (3 terminal)	B1, B2	2	2	**194R-60-C3**
	**30 A Terminal Shield (1 terminal)**	A1, A2	2	2	**194R-30-C1**
	60 A Terminal Shield (1 terminal)	B1, B2	2	2	**194R-60-C1**

✶ For use on either Line or Load Side of Disconnect Switch.

Disconnect Switch Padlock Accessory

	Disconnect Switch Dim Ref.	Pkg. Qty.	Cat. No.
	A1, A2, B1, B2	1	**194R-PLA1**

Replacement Fuse Carriers

	Description	Pkg. Quantity	Cat. No.❄
 *194R-J30-FC*	**30 A CC Fuse Carrier**	1	**194R-C30-FC**
	30 A J Fuse Carrier	1	**194R-J30-FC**
	60 A J Fuse Carrier	1	**194R-J60-FC**
	20 A BS88 Fuse Carrier	1	**194R-B20-FC**
	32 A BS88 Fuse Carrier	1	**194R-B32-FC**
	63 A BS88 Fuse Carrier	1	**194R-B63-FC**
	30 A CSA HRCII-C Fuse Carrier	1	**194R-H30-FC**
	60 A CSA HRCII-C Fuse Carrier	1	**194R-H60-FC**
	**32 A DIN Fuse Carrier**	1	**194R-D32-FC**
	63 A DIN Fuse Carrier	1	**194R-D63-FC**
	25 A NFC Fuse Carrier	1	**194R-F25-FC**
	32 A NFC Fuse Carrier	1	**194R-F32-FC**
	63 A NFC Fuse Carrier	1	**194R-F63-FC**
	30 A Non-Fuse Carrier	1	**194R-N30-FC**
194R-J30-FCS	**60 A Non-Fuse Carrier**	1	**194R-N60-FC**

❄ For fuse status indication add "S" to catalog number, example: 194R-J30-FC becomes 194R-J30-FCS

Auxiliary Contact Blocks❄

	Description	Contact Material	Pkg. Quantity	Cat. No.
 Cat. No. 800F-X10	**Contact Block** **Note:** Sold only in multiples of 10. Order (quantity of) 10 to receive one package of 10 pieces. Latch not included.	N.O.	10	**800F-X10**
		N.C.		**800F-X01**
		N.O.E.M.		**800F-X10E**
		N.C.L.B.		**800F-X01L**
		N.O. with stab terminals		**800F-X10T**
		N.C. with stab terminals		**800F-X01T**
		N.O. spring-clamp		**800F-Q10**
		N.C. spring-clamp		**800F-Q01**

❄ Also used for test mode function.

Fused Disconnect Switches For UL Class Fuses and CSA HRCI-J

Electrical Ratings							
Cat. No.		194R-C30-1753		194R-J30-1753		194R-J60-1753	
CSA Fuse Type/UL Fuse Type		Class CC/HRCI-MISC ❄		Class J/HRCI-J		Class J/HRCI-J	
Maximum Fuse Cartridge Size	(A)	30		30		60	
Maximum Voltage AC DC	(V) (V)	600 250		600 250		600 250	
Ampere Rating	(A)	30		30		60	
Maximum Short Circuit Prospective Fault Current	(kA)	200		200		200	
Fuse Operating Characteristics		Time Delay	Non-Time Delay	Time Delay	Non-Time Delay	Time Delay	Non-Time Delay
Maximum Hp, 3Ø AC							
200V, 60 Hz	(Hp)	5	3	7.5	3	15	7.5
240V, 60 Hz	(Hp)	5	3	7.5	3	15	7.5
480V, 60 Hz	(Hp)	10	5	15	5	30	15
600V, 60 Hz	(Hp)	10	7.5	20	7.5	50	15
Maximum Hp, 1Ø AC							
120V, 60 Hz	(Hp)	0.75	0.5	2	0.5	3	1.5
240V, 60 Hz	(Hp)	2	1.5	3	1.5	10	3
Maximum Hp, DC							
125V DC	(Hp)	2	3	3	2	5	5
250V DC	(Hp)	3	5	5	5	10	10

Mechanical Data			
Cat. No.		194R-C30-1753, 194R-J30-1753	194R-J60-1753
Degree of Protection (per IEC 60947-3) Switch Only Switch with Terminal Shield & Fuse Carriers		IP20 IP20	IP20 IP20
Mechanical Endurance‡	Operations	10 000	10 000
Operating Torque (Maximum)	N•m lb•in.	2 12	3.5 35
Terminal Capacity Power Terminals	mm^2 AWG	2.5…10 #14…#8	2.5…25 #14…#4
Auxiliary Contact Terminals	mm^2 AWG	2.5…4 #14…#12	2.5…4 #14…#12
Maximum Number of Auxiliary Circuits		6	6
Approximate Weight	kg. lbs.	0.92 2.03	1.32 2.9
Minimum Enclosure Size Approximate dimensions in millimeters (inches)	Height Width Depth	248 (9-3/4) 171 (6-3/4) 148 (5-13/16)	248 (9-3/4) 197 (7-3/4) 148 (5-13/16)
Switch Dimension Reference (See dimension drawings.)		A1	B1

❄ CSA HRCI-MISC fuses must also be UL Listed as Class CC fuses.
‡ Based on Rockwell Automation tests in accordance with the requirements as defined in CSA C22.2 No. 4, IEC 60947-3 and UL 98.

Non-Fused Disconnect Switches For CSA and UL Class Applications§

Electrical Ratings					
Cat. No.		194R-N30-1753		194R-N60-1753	
Maximum Fuse Cartridge Size		30♣		60♣	
Maximum Voltage	AC [V] DC [V]	600 250		600 250	
Ampere Rating	[A]	30		60	
Maximum Short Circuit Prospective Fault Current	[kA]	200		200	
Fuse Operating Characteristics➢		Time Delay	Non-Time Delay	Time Delay	Non-Time Delay
Maximum Hp, 3Ø AC	200V, 60 Hz [Hp] 240V, 60 Hz [Hp] 480V, 60 Hz [Hp] 600V, 60 Hz [Hp]	7.5 7.5 15 20	3 3 5 7.5	15 15 30 50	7.5 7.5 15 15
Maximum Hp, 1Ø AC	120V, 60 Hz [Hp] 240V, 60 Hz [Hp]	2 3	0.5 1.5	3 10	1.5 3
Maximum Hp, DC	125V DC [Hp] 250V DC [Hp]	3 5	2 5	5 10	5 10
Power Lost	[W]	2		6	

§ Non-fused disconnect switches must be used with separately installed fuses.
♣ When using CSA HRCI-J, HRCI-MISC (also UL Listed as Class CC) or HRCI-T fuses, and UL Class J, CC or T fuses.
➢ Based on Rockwell Automation tests in accordance with the requirements as defined in CSA C22.2 No. 4, IEC 60947-3, UL 1087 and UL 98.

Mechanical Data			
Cat. No.		194R-N30-1753	194R-N60-1753
Degree of Protection (per IEC 60947-3) Switch Only Switch with Terminal Shield & Fuse Carriers		IP20 IP20	IP20 IP20
Mechanical Endurance‡	Operations	10 000	10 000
Operating Torque (Maximum)	N•m lb•in.	2 12	3.5 35
Terminal Capacity Power Terminals	mm^2 AWG	2.5…10 #14…#8	2.5…25 #14…#4
Auxiliary Contact Terminals	mm^2 AWG	2.5…10 #14…#8	2.5…25 #14…#4
Maximum Number of Auxiliary Circuits		6	6
Approximate Weight	kg lbs.	0.81 1.78	1.14 2.52
Minimum Enclosure Size Approximate dimensions in millimeters (inches)	Height Width Depth	248 (9-3/4) 171 (6-3/4) 111 (4-3/8)	248 (9-3/4) 197 (7-3/4) 111 (4-3/8)
Switch Dimension Reference (See dimension drawings)		A2	B2

∗ Non-fused disconnect switches must be used with separately installed fuses.

All Bulletin 194R Disconnect Switch Cat. Nos., 20 A…63 A Range

Environmental Data	
Ambient Temperature	
Open .....°C (°F) Enclosed .....°C (°F) Storage .....°C (°F)	–2…+55 (–4…+131) –20…+40 (–4…+104) –40…+65 (–40…+149)
Altitude (per IEC 60947-1)	2,000
Relative Humidity (per IEC 60947-1)	90% @ +20 °C (+68 °F) 50% @ +40 °C (+104 °F)

Fused Disconnect Switches For CSA HRCII-C Fuses

Electrical Ratings			
Cat. No.		194R-H30-1753	194R-H60-1753
CSA Fuse Type		HRCII-C	HRCII-C
Maximum Fuse Cartridge Size	[A]	30	60
Maximum Voltage AC	[V]	600	600
Ampere Rating	[A]	30	60
Maximum Short Circuit Prospective Fault Current	[kA]	200	200
Maximum Hp, 3Ø AC			
200V, 60 Hz	[Hp]	7.5	15
240V, 60 Hz	[Hp]	7.5	15
480V, 60 Hz	[Hp]	15	30
600V, 60 Hz	[Hp]	20	50
Maximum Hp, 1Ø AC			
120V, 60 Hz	[Hp]	2	3
240V, 60 Hz	[Hp]	3	10

Mechanical Data			
Cat. No.		194R-H30-1753	194R-H60-1753
Degree of Protection (per IEC 60947-3) Switch Only Switch with Terminal Shield & Fuse Carriers		IP 20 IP 20	IP 20 IP 20
Mechanical Endurance∗	Operations	10 000	10 000
Operating Torque (Maximum)	N•m lb•in.	2 12	3.5 35
Terminal Capacity			
Power Terminals	mm^2 AWG	2.5…10 #14…#8	2.5…25 #14…#4
Auxiliary Contact Terminals	mm^2 AWG	2.5…4 #14…#12	2.5…4 #14…#12
Maximum Number of Auxiliary Circuits		6	6
Approximate Weight	kg lbs.	1.18 2.60	1.18 2.60
Minimum Enclosure Size Approximate dimensions in millimeters (inches)	Height Width Depth	248 (9-3/4) 171 (6-3/4) 148 (5-13/16)	248 (9-3/4) 197 (7-3/4) 148 (5-13/16)
Switch Dimension Reference (See dimension drawings.)		B1	B1

∗ Based on Rockwell Automation tests in accordance with the requirements as defined in CSA C22.2 No. 4 and IEC 60947-3.

Fused Disconnect Switches For BS88 Fuses

Note: Table continued on pages 2-435…2-439.

Electrical Ratings						
Cat. No.		194R-B20-1753		194R-B32-1753	194R-B63-1753	
Fuse Type	BS88 Dimension	A1		A2	A2, A3	
Rated Insulation Voltage (U_i)	[V]	1000		1000	1000	
Rated Conditional Short-Circuit Current (r.m.s.) at 415V	[kA]	100		100	100	
Rated Operational Current AC-22A (I_e)		Fuse Links	Shorting Links	Fuse Links	Fuse Links	Shorting Links
200/230V 50 Hz	[A]	20	32	32	63	63
380/400/415V 50 Hz	[A]	20	32	32	63	63
500V 50 Hz	[A]	20	32	32	63	63
660/690V 50 Hz	[A]	20	32	32	63	63
Rated Operational Current AC-23A (I_e)						
200/230V 50 Hz	[A]	20	32	31	60.5	60
380/400/415V 50 Hz	[A]	22	32	35	57	57
500V 50 Hz	[A]	20	32	32.5	57	57
660/690V 50 Hz	[A]	17	32	32.5	57	57
Rated Thermal Current (I_{the})	[A]	20	32	32	63	63
Maximum kW, AC-23A 3Ø						
200/230V 50 Hz	[kW]	5.5	9	9	18.5	18.5
380/400/415V 50 Hz	[kW]	11	18.5	18.5	30	30
500V 50 Hz	[kW]	11	18.5	18.5	30	30
660/690V 50 Hz	[kW]	15	30	30	55	55
Maximum Fuse Rating	[A]	20	—	32	63	—
Maximum Motor Circuit Fuse Link		20M32	—	32M63	63M100	—
Maximum Fuse Cut-off Current*	[kA]	7.5	7.5	7.5	10	10
Rated Short Time Current, 1 Second	[kA]	1		1	1	

Mechanical Data				
Cat. No.		194R-B20-1753	194R-B32-1753	194R-B63-1753
Degree of Protection (per IEC 60947-3) Switch Only Switch with Terminal Shield & Fuse Carriers		 IP20 IP20	 IP20 IP20	 IP20 IP20
Mechanical Endurance Operations ‡		10 000	10 000	10 000
Operating Torque (Maximum)	N•m lb•in.	2 12	2 12	3.5 35
Terminal Capacity Power Terminals	mm^2	2.5…10 #14…#8	2.5…10 #14…#8	2.5…25 #14…#4
Auxiliary Contact Terminals	mm^2 AWG	2.5…4 #14…#12	2.5…4 #14…#12	2.5…4 #14…#12
Maximum Number of Auxiliary Circuits		6	6	6
Approximate Weight	kg lbs.	0.83 1.84	0.83 1.84	1.18 2.60
Minimum Enclosure Size Approximate dimensions in millimeters (inches)	Height Width Depth	248 (9-3/4) 171 (6-3/4) 148 (5-13/16)	248 (9-3/4) 171 (6-3/4) 148 (5-13/16)	248 (9-3/4) 197 (7-3/4) 148 (5-13/16)
Switch Dimension Reference (See dimension drawings.)		A1	A1	B1

* Fuses must be selected with regard to the maximum prospective fault current of the system and the maximum cut-off current of the fuse when subjected to that maximum fault current. The maximum fuse cut-off current as specified for each disconnect switch must not be exceeded.

‡ Based on Rockwell Automation tests in accordance with the requirements as defined in IEC 60947-3.

Fused Disconnect Switches For DIN Fuses

Electrical Ratings			
Cat No.		194R-D32-1753	194R-D63-1753
Fuse Type	DIN Dimension	00	0, 00
Rated Insulation Voltage (U_i)	(V)	1000	1000
Rated Conditional Short-Circuit Current (r.m.s.) at 415V	(kA)	100	100
Rated Operational Current AC-22A (I_e)		Fuse Links	Fuse Links
200/230V 50 Hz	(A)	32	63
380/400/415V 50 Hz	(A)	32	63
500V 50 Hz	(A)	32	63
660/690V 50 Hz	(A)	32	63
Rated Operational Current AC-23A (I_e)			
200/230V 50 Hz	(A)	31	60.5
380/400/415V 50 Hz	(A)	35	57
500V 50 Hz	(A)	32.5	57
660/690V 50 Hz	(A)	32.5	57
Rated Thermal Current (I_{the})	(A)	40	63
Maximum kW, AC-23A 3Ø			
200/230V 50 Hz	(kW)	9	18.5
380/400/415V 50 Hz	(kW)	18.5	30
500V 50 Hz	(kW)	18.5	30
660/690V 50 Hz	(kW)	30	55
Maximum Fuse Rating	(A)	32	63
Maximum Motor Circuit Fuse Link		—	—
Maximum Fuse Cut-off Current✶	(kA)	14	20
Rated Short Time Current, 1 Second	(kA)	1	1

Mechanical Data			
Cat. No.		194R-D32-1753	194R-D63-1753
Degree of Protection (per IEC 60947-3) Switch Only Switch with Terminal Shield & Fuse Carriers		 IP20 IP20	 IP20 IP20
Mechanical Endurance❄	Operations	10 000	8 000
Operating Torque (Maximum)	N•m lb•in.	2 35	3.5 35
Terminal Capacity Power Terminals	mm^2 AWG	2.5…25 #14…#4	2.5…25 #14…#4
Auxiliary Contact Terminals	mm^2 AWG	2.5…4 #14…#12	2.5…4 #14…#12
Maximum Number of Auxiliary Circuits		6	6
Approximate Weight	kg lbs.	1.18 2.60	1.18 2.60
Minimum Enclosure Size Approximate dimensions in millimeters (inches)	Height Width Depth	248 (9-3/4) 197 (7-3/4) 148 (5-13/16)	248 (9-3/4) 197 (7-3/4) 148 (5-13/16)
Switch Dimension Reference (See dimension drawings.)		B1	B1

✶ Fuses must be selected with regard to the maximum prospective fault current of the system and the maximum cut-off current of the fuse when subjected to that maximum fault current. The maximum fuse cut-off current as specified for each disconnect switch must not be exceeded.

❄ Based on Rockwell Automation tests in accordance with the requirements as defined in IEC 60947-3.

Wiring Schematic

UL LISTED, CSA CERTIFIED	DIMENSION REFERENCE	CIRCUIT
Cat. No.		
194R-C30-1753 194R-J30-1753 194R-J60-1753 194R-H30-1753 194R-H60-1753	A1 A1 B1 B1 B1	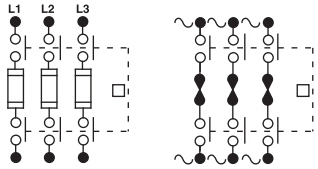
194R-N30-1753 194R-N60-1753	A2 B2	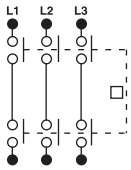

IEC SWITCHES	DIMENSION REFERENCE	CIRCUIT
Cat. No.		
194R-B20-1753 194R-B32-1753 194R-B63-1753 194R-D32-1753 194R-D63-1753 194R-F25-1753 194R-F32-1753 194R-F63-1753	A1 A1 B1 B1 B1 A1 A1 B1	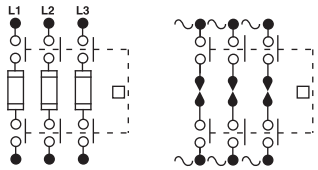
194R-*-1754	(See 3-pole Dimension Reference) for Fused Switches	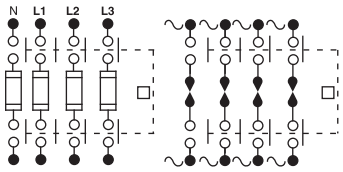

Dimensions in millimeters (inches). Dimensions are not intended to be used for manufacturing purposes.

Disconnect Switch Dimension References A1, A2, B1 and B2 (30 A and 60 A)

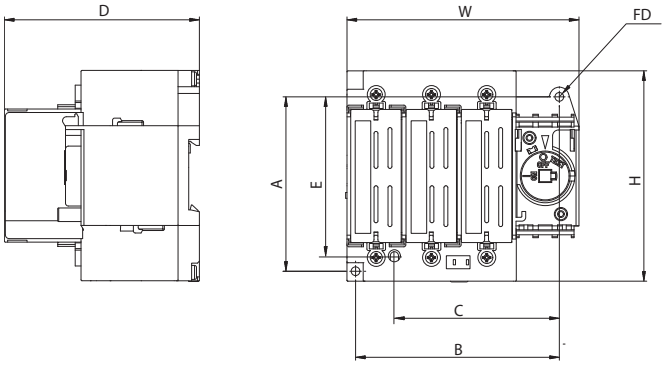

Disconnect Switch Dimension Reference	Approximate Dimensions mm (in)							
	H	W	D	A	B	C❄	E❄	FD
A1	108 (4-1/4)	120 (4-3/4)	101 (4)	90 (3-9/16)	105 (4-1/8)	85 (3-11/32)	82 (3-15/64)	2-M4, 2-#8
A2	108 (4-1/4)	120 (4-3/4)	80 (3-1/8)	90 (3-9/16)	105 (4-1/8)	85 (3-11/32)	82 (3-15/64)	2-M4, 2-#8
B1	113 (4-29/64)	142 (5-19/32)	114 (4-31/64)	100 (3-15/16)	120 (4-23/32)	N/A	N/A	4-M4, 4-#8
B2	113 (4-29/64)	142 (5-19/32)	93 (3-43/64)	100 (3-15/16)	120 (4-23/32)	N/A	N/A	4-M4,4-#8

❄ Mounting holes for backward compatibility with Bulletin 194R legacy switches.

Operating Handles — Cat. No. 194R-HS…/HST

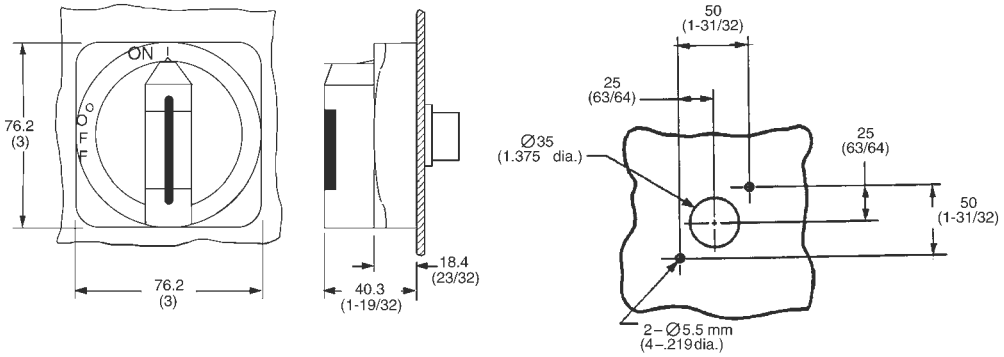

Disconnect Switch Dim. Ref.: A1, A2, B1, B2 (30 A and 60 A) Enclosure and Operating Handle

Dimensions in millimeters (inches). Dimensions are not intended to be used for manufacturing purposes.

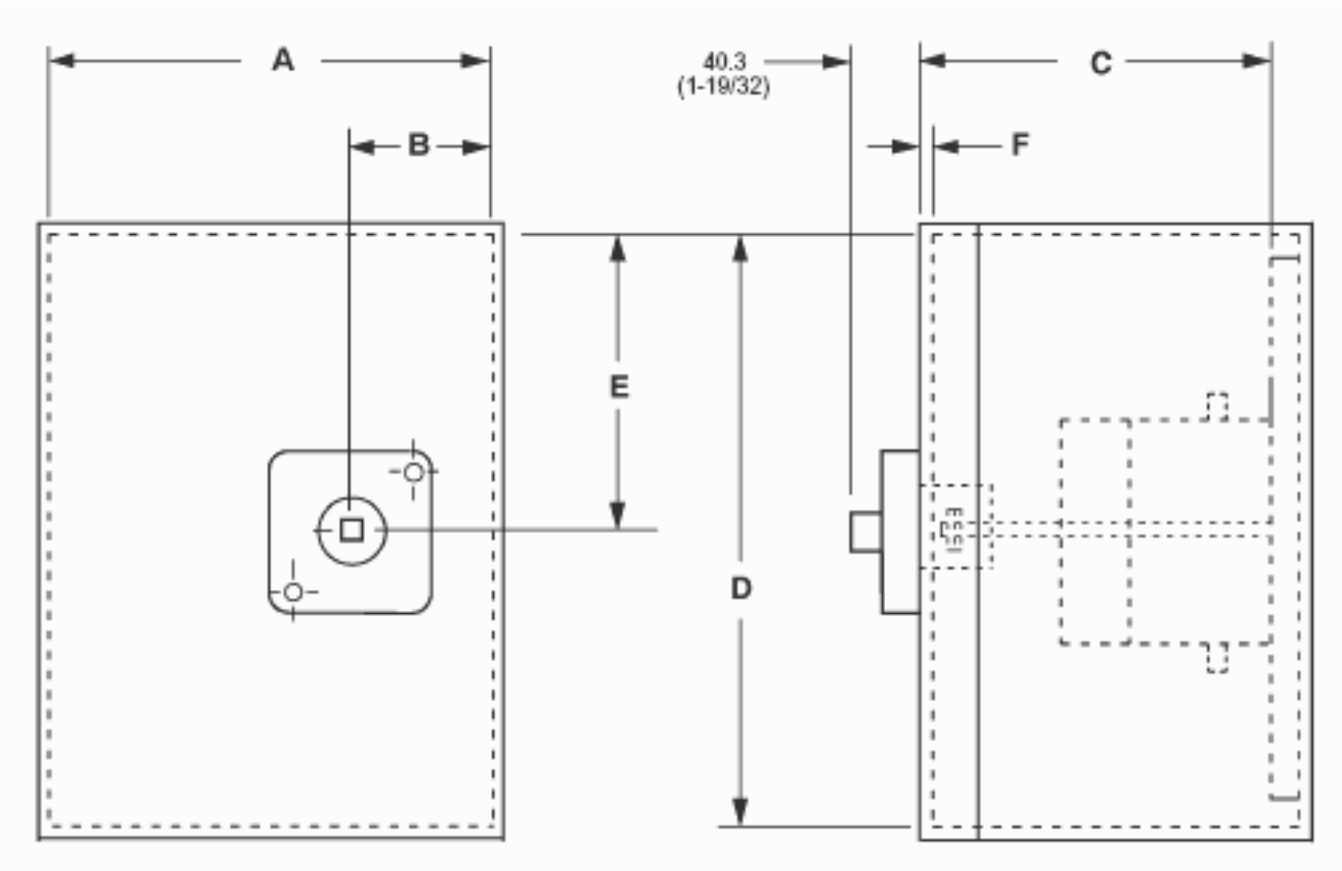

Enclosure Installation Dimensions

Cat. No.	Dimension Reference	A	B	C		D	E	F	
		Maximum	Minimum	Minimum	Maximum	Minimum	Minimum	Minimum	Maximum
194R-B20-1753	A1	171 (6-3/4)	45 (1-49/64)	147.6 (5-13/16)	454 (17-7/8)	248 (9-3/4)	89 (3-1/2)	1.4 (1/16)	4/78 (3/16)
194R-B32-1753									
194R-C30-1753									
194R-F32-1753									
194R-J30-1753									
194R-N30-1753	A2	171 (6-3/4)	45 (1-49/64)	111 (4-3/8)	454 (17-7/8)	248 (9-3/4)	89 (3-1/2)	1.4 (1/16)	4/78 (3/16)
194R-B63-1753	B1	197 (7-3/4)	45 (1-49/64)	147.6 (5-13/16)	454 (17-7/8)	248 (9-3/4)	105 (4-9/64)	1.4 (1/16)	4/78 (3/16)
194R-D32-1753									
194R-D63-1753									
194R-F63-1753									
194R-H30-1753									
194R-H60-1753									
194R-J60-1753									
194R-N60-1753	B2	197 (7-3/4)	45 (1-49/64)	111 (4-3/8)	454 (17-7/8)	248 (9-3/4)	105 (4-9/64)	1.4 (1/16)	4/78 (3/16)

Universal Internal Handle Dimensions

Dimensions in millimeters (inches). Dimensions are not intended to be used for manufacturing purposes.

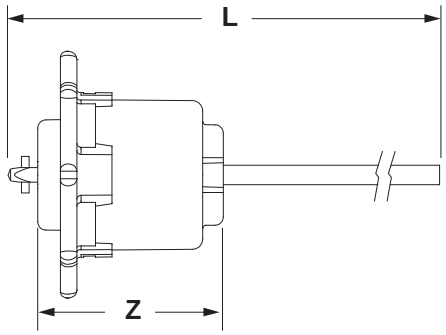

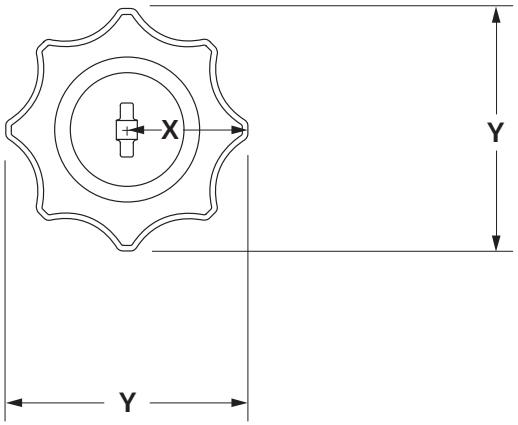

Catalog No.		$L_{(max)}$	X	Y	Z
194R -NHR1	mm (in.)	305 (12)	38 (1-1/2)	76 (3)	57 (2-1/4)
194R -NHR2	mm (in.)	533 (21)	38 (1-1/2)	76 (3)	57 (2-1/4)

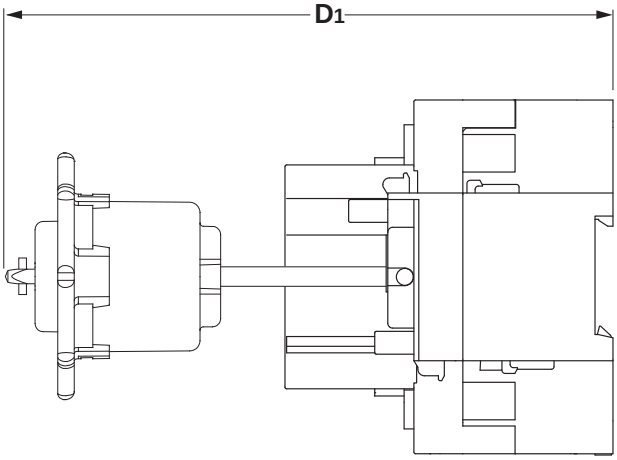

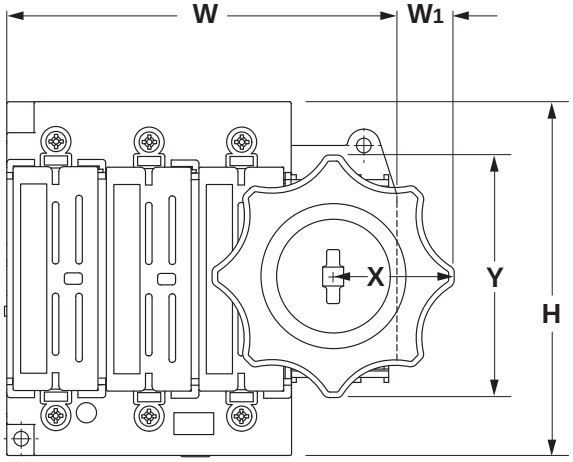

Catalog No.	Dim. Ref.		H	W	W_1	$D_{1(min)}$	X	Y
194R-B20-* 194R-F25-* 194R-B32-* 194R-F32-* 194R-C30-* 194R-J30-*	A1	mm (in.)	108 (4-1/4)	120 (4-3/4)	19 (3/4)	184 (7-1/4)	38 (1-1/2)	76 (3)
194R-N30-*	A2	mm (in.)	108 (4-1/4)	120 (4-3/4)	19 (3/4)	160 (6-5/16)	38 (1-1/2)	76 (3)
194R-B63-* 194R-H30-* 194R-D32-* 194R-H60-* 194R-D63-* 194R-J60-* 194R-F63-*	B1	mm (in.)	113 (4-29/64)	142 (5-19/32)	19 (3/4)	196 (7-49/64)	38 (1-1/2)	76 (3)
194R-N60-*	B2	mm (in.)	113 (4-29/64)	142 (5-19/32)	19 (3/4)	176 (6-59/64)	38 (1-1/2)	76 (3)

Enclosure Installation Dimensions

Dimensions in millimeters (inches). Dimensions are not intended to be used for manufacturing purposes.

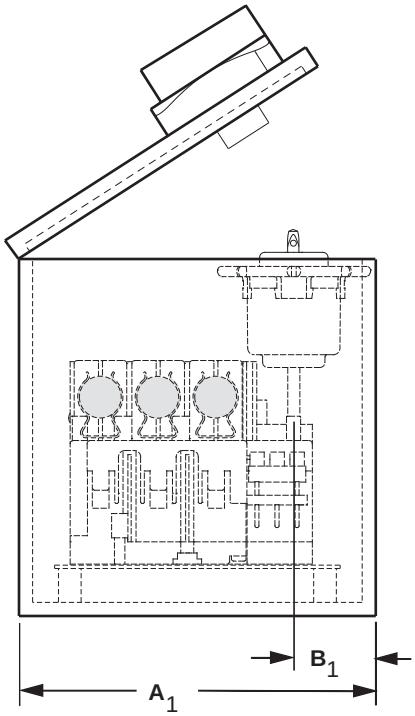

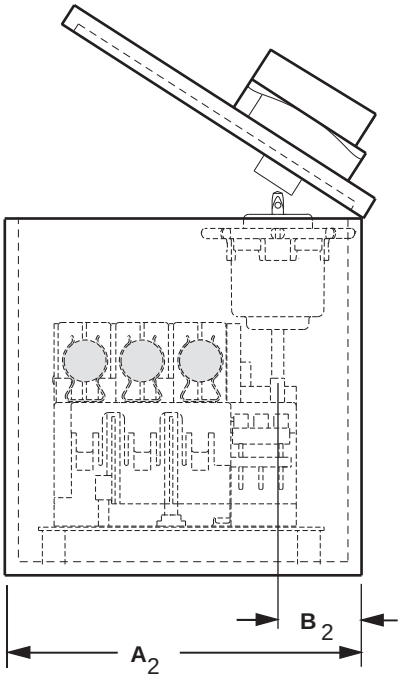

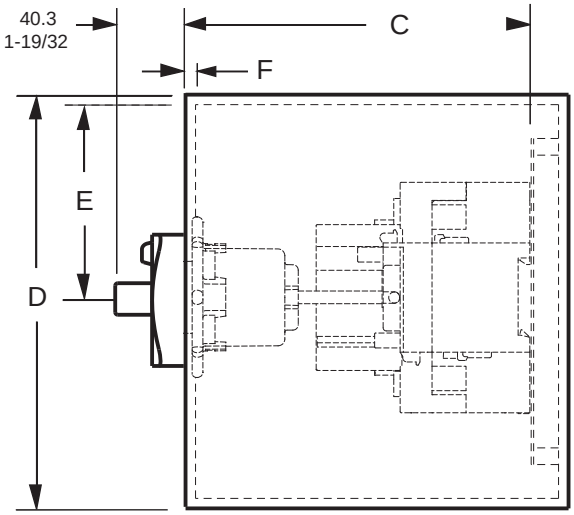

ENCLOSURE INSTALLATION DIMENSIONS

CAT.	DIM. REF.		A_{112} MINIMUM	A_2 MINIMUM	B MINIMUM	B MINIMUM	C MINIMUM	C MAXIMUM	D MINIMUM	E MINIMUM	F MINIMUM	F MAXIMUM
194R-B20-* 194R-F25-* 194R-C30-* 194R-B32-* 194R-J30-* 194R-F32-*	A1	mm	171	203	45	76	178	454	248	89	1.4	4.78
		in.	6-3/4	7-63/64	1-49/64	3	7	17-7/8	9-3/4	3-1/2	1/16	3/16
194R-N30-*	A2	mm	171	203	45	76	178	454	248	89	1.4	4.78
		in.	6-3/4	7-63/64	1-49/64	3	7	17-7/8	9-3/4	3-1/2	1/16	3/16
194R-D32-* 194R-B63-* 194R-H60-* 194R-D63-* 194R-H30-* 194R-F63-* 194R-J60-*	B1	mm	197	228	45	76	178	454	248	105	1.4	4.78
		in.	7-3/4	8-63/64	1-49/64	3	7	17-7/8	9-3/4	4-9/64	1/16	3/16
194R-N60-*	B2	mm	197	228	45	76	178	454	248	105	1.4	4.78
		in.	7-3/4	8-63/64	1-49/64	3	7	17-7/8	9-3/4	4-9/64	1/16	3/16

***Dimensions common for R1 or R2 shaft lengths**

Proper Selection of Disconnect Switches
Applications Within Canada and the United States

General

The requirements for disconnect switches used in motor branch circuits rated 600V and less are defined in Article 430, Part J of the U.S. National Electrical Code (NEC), NFPA70. Canadian Electrical Code (CEC) requirements are very similar in the area of motor branch circuit disconnect requirements. For simplicity, we will treat the NEC and CEC requirements as being the same — and reference specific sections of the U.S. National Electrical Code.
The requirements for properly sizing a disconnect switch are dependent on the type of application. The NEC refers to two types of applications: single motor and combination loads. A combination load consists of an application where two or more motors are used together or where one or more motors are used in combination with other loads, such as resistance heaters.

Single Motor Applications

Section 430-110 Paragraph (a) states that the disconnect switch must have an ampere rating of at least 115% of the full-load current rating of the motor.
Example 1: For a motor with a full-load current of 22 A, the disconnect switch must be rated at least 25.3 A (22 x 1.15).
If the disconnecting means under evaluation is rated in horsepower, the selection of the disconnect switch is even more straightforward; a disconnect switch must have a horsepower rating equal to, or greater than the horsepower rating of the motor at the applicable voltage.
Example 2: For a motor with a 10 Hp rating at 460V AC, the disconnect switch must be rated at least 10 Hp at 460V AC.
If the disconnect switch is rated in horsepower, and UL Listed, UL Component Recognized, or CSA Certified, it will meet the requirements for the 115% full load current rating stipulated by the NEC.

Combination Load Applications

Section 430-110 Paragraph (c) addresses the rating of the disconnecting means for combination loads. This paragraph essentially requires that the loads that "may be simultaneous on a single disconnecting means" be combined to provide equivalent full-load and locked-rotor currents for what is then to be considered as a single motor for the purpose of selecting the appropriate disconnecting means. This means that it is necessary to identify the particular combination of connected loads which can be operating simultaneously and will result in the maximum full-load and locked-rotor current sums.
The individual full-load current values are to be selected from Tables 430-148, 430-149, or 430-150 and the locked-rotor values are to be from Table 430-151.
The equivalent single motor full-load current is the sum of the simultaneously operating motor full-load currents and the rating in amperes of other loads operating at the same time. The equivalent locked-rotor current is the sum of the simultaneously started motors' locked-rotor currents and the full-load currents of the remaining operating motor and non-motor loads.
The disconnecting means shall have a current rating equal to or greater than 115% of the equivalent single motor full-load current and have a horsepower rating equal to or greater than the horsepower rating determined from the equivalent locked-rotor summation.
Consider the following 460V application:

Load	Hp	Full-Load Current [A]
Motor 1	5	7.6 (simultaneous)
Motor 2	10	14.0 (not included)∗
Motor 3	15	21.0 (simultaneous)
Motor 4	20	27.0 (simultaneous)
Other		7.0 (simultaneous)
Total Equivalent		62.6 (simultaneous)

∗ Motor 2 is not included in the total since it cannot operate simultaneously with the other motors, therefore, the disconnect switch must be rated at least 72 A (1.15 x 62.6).
Consider now the locked-rotor current analysis for the same application:

Load	Hp	Full-Load Current [A]
Motor 1	5	(7.6FLA) 45.6 (simultaneous)
Motor 2	10	84.0 (not included)∗
Motor 3	15	126.0 (simultaneous)❄
Motor 4	20	162.0 (simultaneous)❄
Other		7.0 (simultaneous)
Total Equivalent		302.6 (simultaneous)

∗ Note again that Motor 2 cannot operate simultaneously with the other loads.
❄ The largest equivalent locked-rotor current occurs when motors 3 and 4 start together while the other loads marked "simultaneous" are already operating. Since Motor 1 is not starting with Motors 3 and 4, its full-load current will be added to the total instead of its locked-rotor current.

Table 430-151, which provides the correlation between locked-rotor currents and Hp ratings, shows that a 40 Hp rating is the equivalent for 302.6 locked-rotor amperes.
Therefore, the disconnect selected for this application must have a current rating of at least 72 A and a Hp rating of at least 40 Hp. In this case a Bulletin 194R rated for 100 A and 60 Hp at 460V would be an appropriate choice. What can be seen from this analysis is that, depending upon the number of motors that can start simultaneously, the actual size of the required disconnect is sometimes determined by the equivalent full load current (72 A) and other times by the equivalent horsepower determined from the locked rotor analysis (40 Hp).

Applications Outside the United States and Canada

General

Disconnect switches designed to IEC Standards and used in applications outside of North America are selected based on the ampere, horsepower, or kilowatt rating of the disconnect switch, under various utilization categories. Utilization categories for disconnect switches are as follows:

Nature of Current	Utilization Category		Typical Applications
	Frequent Operation	Infrequent Operation	
AC	AC-20A∗	AC-20B∗	Connecting and disconnecting under no load conditions
	AC-21A	AC-21B	Switching of resistive loads including moderate overloads
	AC-22A	AC-22B	Switching of mixed resistive and inductive loads, including moderate overloads
	AC-23A	AC-23B	Switching of motor loads or other highly inductive loads

∗ The use of these utilization categories is not permitted in the U.S.

For any application, the disconnect switch rating (A. Hp, or kW) must be greater than or equal to the application full-load current or power (Hp or kW), in the appropriate utilization category.
Example 1: For a 380V 50 Hz distribution application (AC-22A), with a 63 A full load current, the disconnect switch must be rated at least 63 A at 380V 50 Hz for use in AC-22A applications.
Example 2: For a 415V 50 Hz motor application (AC-23A), with a 75 kW rating, the disconnect switch must be rated at least 75 kW at 415V 50 Hz for use in AC-23A applications.

Fuse Description

With Bulletin 194R Fused Disconnect Switches

Bulletin 194R Fused Disconnect Switches have been designed to accept a variety of fuses for worldwide application flexibility. Following is a brief summary of typical fuse specifications, where the fuses are typically used, and which Bulletin 194R disconnect switches will accommodate each fuse type. Fuse manufacturers should be contacted for more specific information about each fuse type. **Fuses are not available from Rockwell Automation. BS88 Fuses (63 A shown)**
Dimensions in millimeters (inches). Dimensions are not intended to be used for manufacturing purposes.

- IEC fuse type: Fuse-link for bolted connection
- Voltage rating: 660/690V AC
- Interrupting rating: 80 kA
- Standard cartridge sizes: A1, A2, A3, A4, B1, B2, B3, B4
- Typical ampere ratings: 2…400 A
- Construction: Blade type for bolted connection
- Can be installed on Bulletin 194R disconnect switch **Cat. Nos: 194RNA100P3, NA200P3, NA300P3, NA380P3, NA400P3, NB200P3, NB300P3**
- Where used: United Kingdom, Australia, New Zealand, Asia

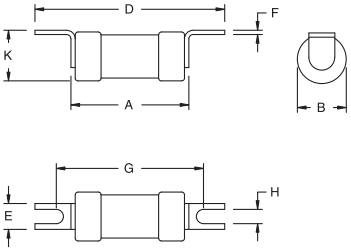

Standard cartridge size A1

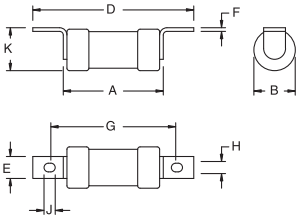

Standard cartridge sizes A2, A3, A4

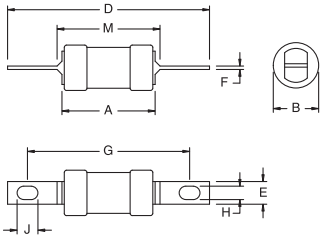

Standard cartridge sizes B1, B2, B3, B4

Dim. Ref.	Ampere Range [A]	A	B	D	E	F	G	H	K
A1	2…20	36.50 (1-7/16)	13.90 (35/64)	55.60 (2-3/16)	11.10 (7/16)	0.80 (1/32)	4.50 (1-3/4)	4.40 (11/64)	14.30 (9/16)

Dim. Ref.	Ampere Range [A]	A	B	D	E	F	G	H	J	K
A2	2…20	56.40 (2-7/32)	23.80 (15/16)	85.80 (3-3/8)	8.70 (11/32)	1.20 (3/64)	73.00 (2-7/8)	5.20 (13/64)	7.10 (9/32)	23.80 (15/16)
A3	35…63	56.40 (2-7/32)	23.80 (15/16)	85.80 (3-3/8)	8.70 (11/32)	1.20 (3/64)	73.00 (2-7/8)	5.20 (13/64)	7.10 (9/32)	23.80 (15/16)
A4	80…100	70.00 (2-3/4)	34.90 (1-3/8)	111.00 (4-3/8)	19.10 (3/4)	2.40 (3/32)	93.70 (3-11/	8.70 (11/32)	10.30 (13/32)	34.90 (1-3/8)

Dim. Ref.	Ampere Range [A]	A	B	D	E	F	G	H	J	M
B1	2…20	70.00 (2-3/4)	34.90 (1-3/8)	136.50 (5-3/8)	19.10 (3/4)	3.20 (1/8)	111.00 (4-3/8)	8.70 (11/32)	11.90 (15/32)	79.40 (3-1/8)
B2	125…200	77.00 (3-1/32)	41.30 (1-5/8)	136.50 (5-3/8)	19.10 (3/4)	3.20 (1/8)	111.00 (4-3/8)	8.70 (11/32)	11.90 (15/32)	79.40 (3-1/8)
B3	250…315	83.00 (3-9/32)	54.00 (2-1/8)	136.50 (5-3/8)	25.40 (1)	3.20 (1/8)	111.00 (4-3/8)	8.70 (11/32)	11.90 (15/32)	82.00 (3-1/4)
B4	355…400	70.00 (2-3/4)	61.10 (2-13/32)	136.50 (5-3/8)	25.40 (1)	6.30 (1/4)	111.00 (4-3/8)	8.70 (11/32)	11.90 (15/32)	85.80 (3-3/8)

2

DIN Fuses (100 A shown)

Dimensions in millimeters only.
Dimensions are not intended to be used for manufacturing purposes.

- IEC fuse type: Fuse-link with blade contacts
- Voltage rating: 660/690V AC
- Interrupting rating: 120,000 A
- Standard cartridge sizes: 00, 0, 1 and 2
- Typical ampere ratings: 2…400 A
- Construction: Blade type
- Can be installed on Bulletin 194R disconnect switch Cat. Nos: 194RND072P3, ND138P3, ND250P3, ND300P3
- Where used: Europe, South America, Middle East and India

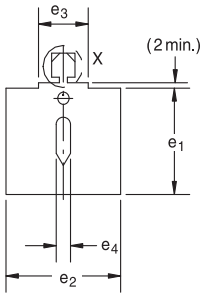

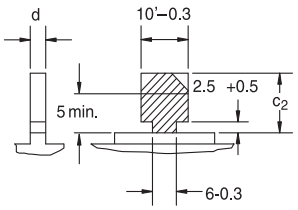

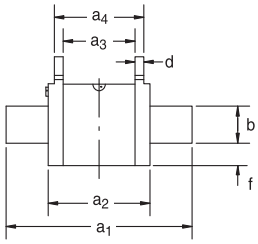

Size	Max. rated current (A)	a1	a2	a3	a4	b (min.)	d	e1 (max.)	e2 (max.)	e3	e4 ±0.2	f
00	100	78.5 ± 1.5	53	45 ± 1.5	49 ±1.5	15	2 ±0.5	48	30	20 ±5	6	12.5
0	160	125 ±2.5	67	62 +3 –1.5	68 +1.5 –3	15	2 +1.5 –0.5	48	40	20 ±5	6	11.5
1	250	135 ±2.5	71	62 ±2.5	68 ±2.5	20	2.5 +1.5 –0.5	53	52	20 +5 –2	6	10
2	400	150 ±2.5	72	62 ±2.5	68 ±2.5	25	2.5 +1.5 –0.5	61	60	20 +5 –2	6	10

With Bulletin 194R Fused Disconnect Switches, Continued

CSA HRCI and UL Class Fuses (10 A shown)

CSA HRCI and UL Class Fuses (10 A shown)

Dimensions in millimeters (inches).
Dimensions are not intended to be used for manufacturing purposes.

- UL fuse type: Class CC
- CSA fuse type: HRCI-MISC
- Voltage rating: 600V AC
- Interrupting rating: 200 000 A
- Standard cartridge sizes: 30 A
- Typical ampere ratings: 1…30 A
- Construction: Ferrule type
- Can be installed on Bulletin 194R disconnect switch **Cat. No: 194R-NC030P3**
- Where used: North America

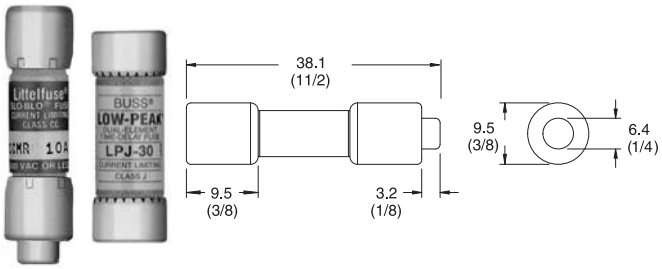

CSA HRCI and UL Class Fuses (30 A shown)

Dimensions in millimeters (inches).
Dimensions are not intended to be used for manufacturing purposes.

- CSA fuse type: HRCI-J
- UL fuse type: Class J
- Voltage rating: 600V AC
- Interrupting rating: 200 000 A
- Standard cartridge sizes: 30, 60, 100, 200, and 400 A
- Typical ampere ratings: 1…600 A; Blade type for bolted connection
- Can be installed on Bulletin 194R disconnect switch **Cat. Nos: 194R-NJ030P3, NJ060P3, NJ100P3, NJ200P3, NJ400P3**
- Where used: North America

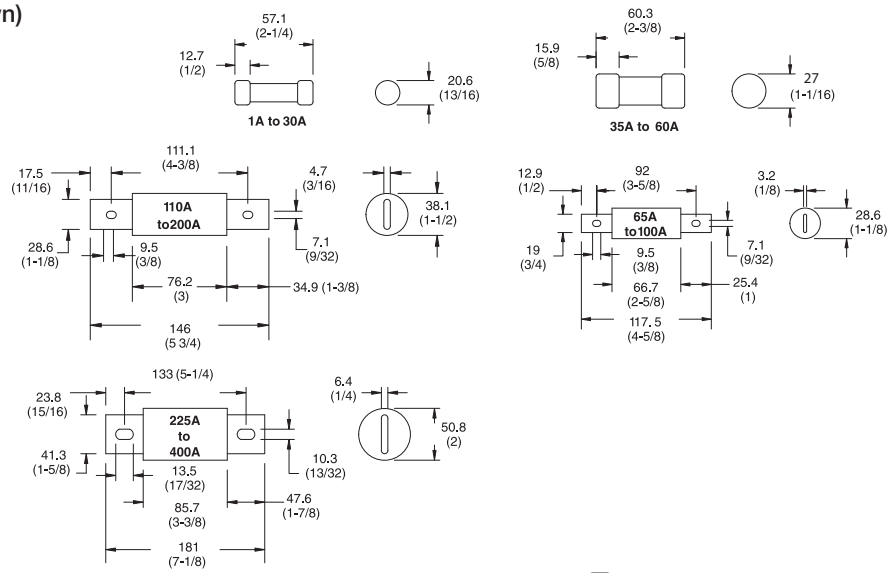

CSA HRCII Fuses (100 A shown)

Dimensions in millimeters (inches).
Dimensions are not intended to be used for manufacturing purposes.

- CSA fuse type: HRCII-C
- Voltage rating: 600V AC
- Interrupting rating: 200 000 A
- Standard cartridge sizes: 30, 60, 100, 200, and 400 A
- Typical ampere ratings: 1…400 A
- Construction: Blade type for bolted connection
- Can be installed on Bulletin 194R disconnect switch **Cat. Nos: 194R-NA200P3, NA300P3, NH100P3, NH200P3, NH400P3**
- Where used: Canada

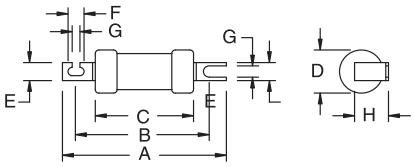

Standard Cartridge Sizes 30, 60, and 100 A

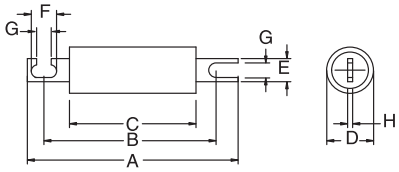

Standard Cartridge Size 200 A

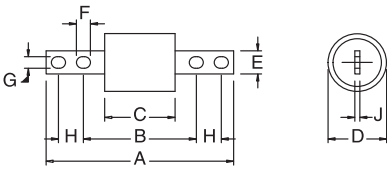

Standard Cartridge Size 400 A

Current Range [A]	A	B	C	D	E	F	G	H	J
0…30	84.14 (3-5/16)	71.04 (2-51/64)	50.8 (2)	20.64 (13/16)	8.73 (11/32)	7.54 (19/64)	5.56 (7/32)	23.81 (15/16)	1.59 (1/16)
31…60	88.9 (3-1/2)	71.04 (2-51/64)	50.8 (2)	20.64 (13/16)	12.7 (1/2)	7.54 (19/64)	5.56 (7/32)	26.99 (1-1/16)	1.59 (1/16)
61…100	109.54 (4-5/16)	92.47 (3-41/64)	60.72 (2-25/64)	34.13 (1-11/32)	19.05 (3/4)	11.91 (15/32)	8.73 (11/32)	34.93 (1-3/8)	2.38 (3/32)
101…200	134.94 (5-5/16)	109.14 (4-19/64)	76.2 (3)	38.1 (1-1/2)	19.05 (3/4)	11.91 (15/32)	8.73 (11/32)	3.18 (1/8)	—
201…400	207.96 (8-3/16)	133.35 (5-1/4)	76.2 (3)	60.33 (2-3/8)	25.4 (1)	12.7 (1/2)	9.53 (3/8)	25.4 (1)	4.76 (3/16)
401…600	207.96 (8-3/16)	133.35 (5-1/4)	76.2 (3)	76.2 (3)	25.4 (1)	15.08 (19/32)	10.32 (13/32)	25.4 (1)	9.53 (3/8)

IEC Fused and Non-Fused Disconnects

Overview/Product Selection

Bulletin 194R Global Fused and Non-Fused Disconnects

- 100 A…400 A sizes
- Open or enclosed switches
- Fused switch versions:
  - BS88 - DIN
  - CSA HRCII-C - CSA HRCI-J
  - UL Class J - UL Class CC
- Non-fused switches
- Operating handle ingress ratings:
  - IP42 (Type 1)
  - IP66 (Type 3R, 3, 12, 4, 4X)
- Handle with or without defeater mechanism
- Padlockable handle with up to three padlocks
- Up to 8 auxiliary contacts can be added per switch
- Suitable as service entrance disconnecting means (UL 98)

Table of Contents

Standards Compliance

IEC 60947-4-1/EN60947-3
BS EN60947-3
VDE 0660
CSA 22.2 No. 4
NEMA KS-1
UL 98

Certifications

UL Listed (File No. E 47426, Guide WHTY)
CSA Certified (File No. LR1234)
CE
ASTA Certified
LOVAG Certified

The Bulletin 194R line of fused and non-fused global disconnect switches provides the flexibility to meet worldwide applications. These rod-operated disconnect switches incorporate onboard fuse carriers thus reducing panel space requirements and have high short circuit protection ratings. The disconnect switches are UL Listed, CSA, ASTA and LOVAG Certified and are designed to meet IEC 60947-3, VDE, DIN, BS and applicable NEMA requirements.

Your order must include: 1) the desired disconnect switch Cat. No. Note the disconnect switch dimension reference, 2) the appropriate operating handle and operating shaft Cat. No. corresponding to the dimension reference of the disconnect switch, 3) if required, Cat. No. of any accessories.

Product Selection

UL/CSA Fused Disconnect Switches

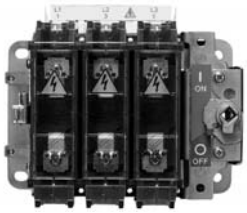

Cat. No. 194R-NJ100P3

Rated Current [A]	Maximum Hp Ratings ∗								Fuse	Dim. Ref.	Cat. No.∗
	1Ø (60 Hz)		3Ø (60 Hz)				DC				
	115V	230V	200V	230V	460V	575V	125V	250V			
CSA HRCII-C FUSES											
100	—	15	25	30	60	75	—	—	100 A HRCII-C	D1	194R-NH100P3
200	—	30	50	60	125	150	—	—	200 A HRCII-C	E1	194R-NH200P3
400	—	50	100	125	250	300	—	—	400 A HRCII-C	F1	194R-NH400P3
UL CLASS J AND CSA HRCI-J FUSES ‡											
100	7-1/2	15	25	30	60	75	—	20	100 A CLASS J	C1	§ **194R-NJ100P3**
200	—	25	50	60	125	150	—	40	200 A CLASS J	D1	**194R-NJ200P3**
400	—	50	100	125	250	300	—	50	400 A CLASS J	F1	**194R-NJ400P3**

∗ Time delay fuses may be required to utilize the disconnect switch at its maximum horsepower rating.
‡ Only CSA Certified HRCI-J and UL Listed Class J fuses are suitable for use with these disconnect switches.
§ Line and load terminals use 4 mm Allen-type wrench; will not accept terminal lugs.

UL/CSA Non-Fused Disconnect Switches

Non-Fused											
Fuse Description	Rated Current [A]	Maximum Hp Ratings								Dim. Ref.	Cat. No.
		1Ø (60 Hz)		3Ø (60 Hz)				DC			
		115V	230V	200V	230V	460V	575V	125V	250V		
Non-fused disconnect switches must use separately installed fuses for upstream short circuit protection.	100	7-1/2	15	25	30	60	75	—	20	C1	‡ **194R-NN100P3**
	200	—	25	50	60	125	150	—	40	D1	**194R-NN200P3**
	400	—	—	100	125	250	300	—	50	F1	**194R-NN400P3**

‡ Line and Load Terminals use 4 mm Allen-type wrench; will not accept terminal lugs.

BS88 Fused Disconnect Switches

Ratings (AC23)												
With Fuse Links					With Shorting Links							
	3Ø Maximum kW (50 Hz)					3Ø Maximum kW (50 Hz)						
Load Rating I_e [A]	200/ 230V	380/ 400/ 415V	500V	660/ 690V	Load Rating I_e [A]	200/ 230V	380/ 400/ 415V	500V	660/ 690V	Fuse	Dim. Ref.	Cat. No.
75	22	37	45	55	75	22	37	45	55	BS88 A3	C1	194R-NA380P3
138	37	75	90	110	138	37	75	90	110	BS88 A4	D1	194R-NA400P3
245	75	132	160	160	245	75	132	160	160	BS88 B1, B2	E1	194R-NB200P3
300	90	160	200	200	300	40	160	200	200	BS88 B1, B2 B3, B4	F1	194R-NB300P3

DIN Fused Disconnect Switches

Ratings (AC23)							
Load Rating I_e [A]	With Fuse Links 3Ø Maximum kW (50 Hz)				Fuse	Dim. Ref.	Cat. No.
	200/230V	380/400/415V	500V	660/690V			
75	22	37	45	55	DIN 00	C2	194R-ND072P3
138	37	75	90	110	DIN 0, 00❄	D2	194R-ND138P3
245	75	132	160	160	DIN 1	E2	194R-ND250P3
300	90	160	200	200	DIN 1, 2	F1	194R-ND300P3

❄ Series C only.

Operating Handles (Accepts 3 Padlocks)

	For Use With	Description	Color	Degree of Protection	Cat. No.
	C1, C2, D1, D2, E1, E2, F1	Standard orientation **with** defeater	Black/Grey	IP42 (Type 1)	**194R-HM1**
				IP66 (Type 3R, 3, 12, 4, 4X)	**194R-HM4**
			Red/Yellow	IP42 (Type 1)	**194R-HM1E**
				IP66 (Type 3R, 3, 12, 4, 4X)	**194R-HM4E**
		Standard orientation **without** defeater	Black/Grey	IP42 (Type 1)	194R-HM1-N2
				IP66 (Type 3R, 3, 12, 4, 4X)	**194R-HM4-N2**
			Red/Yellow	IP42 (Type 1)	**194R-HM1E-N2**
				IP66 (Type 3R, 3, 12, 4, 4X)	**194R-HM4E-N2**
		90° Rotated orientation **with** defeater	Black/Grey	IP42 (Type 1)	**194R-HM1-N1**
				IP66 (Type 3R, 3, 12, 4, 4X)	**194R-HM4-N1**
			Red/Yellow	IP42 (Type 1)	**194R-HM1E-N1**
				IP66 (Type 3R, 3, 12, 4, 4X)	**194R-HM4E-N1**
		90° Rotated orientation **without** defeater	Black/Grey	IP42 (Type 1)	**194R-HM1-N3**
				IP66 (Type 3R, 3, 12, 4, 4X)	**194R-HM4-N3**
			Red/Yellow	IP42 (Type 1)	194R-HM1E-N3
				IP66 (Type 3R, 3, 12, 4, 4X)	194R-HM4E-N3

NFPA 79 Operating Shaft/Handle Kits

An internal handle that permits operation of the disconnect switch when the panel door is open, in compliance with NFPA 79.

Description	Disconnect Switch Dim. Ref.	Operating Shaft Type	Operating Shaft Length [mm (in.)]	Cat. No.
NFPA 79 Handle Kit Includes NFPA 79 handle and operating shaft	C1, C2, D1, D2	8 mm square size	305 (12)	194R-NHR3
			533 (21)	194R-NHR4
	E1, E2, F1	9.5 mm square size	305 (12)	194R-NHR5
			533 (21)	194R-NHR6

Operating Shafts

Disconnect Switch Dim. Ref.	Operating Shaft Type	Operating Shaft Length Approx. Dim. [mm (in.)]	Enclosure Working Depth: Disconnect Switch Dim. Ref.	Enclosure Working Depth: Minimum Approx. Dim. [mm (in.)]	Enclosure Working Depth: Maximum Approx. Dim. [mm (in.)]	Cat. No.
C1, C2, D1, D2	Standard Length	200 (7.9)	C1, C2 D1, D2	183 (7.2)	254 (10.0)	**194R-R3**
	Extended Length	403 (15.9)		183 (7.2)	457 (18.0)	**194R-R4**
E1, E2, F1	Standard Length	278 (10.9)	E1, E2, F1	243 (9.6)	356 (14.0)	**194R-R5**
	Extended Length	532 (20.9)		243 (9.6)	610 (24.0)	**194R-R6**

Complete UL/CSA Disconnect Switch Kits

Includes Disconnect Switch, Operating Handle with Defeater Mechanism and Operating Shaft

Rated Current [A]	Maximum Horsepower Ratings∗ 3Ø (60 Hz) 200V	230V	460V	575V	Disconnect Switch❄ Fuse	Dim. Ref.	Operating Shaft Type	Operating Handle: Degree of Protection	Handle Color	Cat. No.
100	25	30	60	75	None	C1	Standard Length	!P66 (Type 3, 3R, 4, 4X, 12)	Black/Grey	194R-NN100P34R3
									Red/Yellow	194R-NN100P34ER3
	25	30	60	75	100 A Class J	C1			Black/Grey	**194R-NJ100P34R3**
									Red/Yellow	**194R-NJ100P34ER3**
200	50	60	125	150	None	D1			Black/Grey	194R-NN200P34R3
									Red/Yellow	194R-NN200P34ER3
	50	60	125	150	200 A Class J	D1			Black/Grey	194R-NJ200P34R3
									Red/Yellow	**194R-NJ200P34ER3**
400	100	125	250	300	None	F1			Black/Grey	194R-NN400P34R5
									Red/Yellow	194R-NN400P34ER5
	100	125	250	300	400 A Class J	F1			Black/Grey	194R-NJ400P34R5
									Red/Yellow	194R-NJ400P34ER5

∗ Time delay fuses may be required to utilize the disconnect switch at its maximum horsepower ratings.
❄ Only UL Listed Class J and CSA Certified HRCI-J fuses are suitable for use with these disconnect switches.

UL Enclosed Disconnect Switches (Fused and Non-Fused)

Stainless Steel Enclosure

Rated Current [A]	Maximum Horsepower Ratings 1Ø (60Hz) 115V	1Ø (60Hz) 230V	3Ø (60Hz) 200V	3Ø (60Hz) 230V	3Ø (60Hz) 460V	3Ø (60Hz) 575V	Fuse Type	Dim. Ref.	IP66 (Type 3/4/12) Watertight Dusttight Sheet Metal Enclosure Cat. No.∗	IP66 (Type 4/4X) Watertight, Corrosion-Resistant Stainless Steel Enclosure Cat. No.∗	IP66 (Type 4/4X) Watertight, Corrosion-Resistant Non-Metallic Enclosure Cat. No.∗
100	7-1/2	15	25	30	60	75	Class J Fused	C1	194R-FJ100P3	194R-CJ100P3	194R-KJ100P3
							None	C1	194R-FN100P3	194R-CN100P3	194R-KN100P3
200	—	25	50	60	125	150	Class J Fused	D1	194R-FJ200P3	194R-CJ200P3	194R-KJ200P3
							None	D1	194R-FN200P3	194R-CN200P3	194R-KN200P3
400	—	50	100	125	250	300	Class J Fused	F1	194R-FJ400P3	194R-CJ400P3	194R-KJ400P3
							None	F1	194R-FN400P3	194R-CN400P3	194R-KN400P3

∗ Black operating handles supplied as standard. To order Red/Yellow Handles, add string suffix **"E"** to the Cat. No. Example: **Cat. No. 194R-FJ100P3E.**

Accessories

Modifications for Enclosed Bulletin 194R Switches (max. 4 contact blocks/8 auxiliary contacts per switch)

Description	Uses Cat. No.	Suffix Code
Auxiliary Contact (1 N.O. + 1 N.C.)	195-GA11	-989
Auxiliary Contact (1 N.O.)	195-GA10	-98
Auxiliary Contact (1 N.C.)	195-GA01	-99

Accessories

	Description	Disconnect Switch Dim Ref.	Pkg. Qty.	Cat. No.
	**Shaft Guard** — Provides extra protection against contact with shaft	C1, C2, D1, D2, E1, E2, F1	1	194R-R3G

Fuse Covers

	Disconnect Switch Dim Ref.	Quantity Required Per Disconnect Switch	Cat. No.
	C1	3	**194R-FCC1**
	C2		**194R-FCC2**
	D1, D2		**194R-FCD1**
	E1, E2		**194R-FCE1**
Cat. No. 194R-FCD1	F1		**194R-FCF1**

Terminal Shields∗

	Disconnect Switch Dim Ref.	Quantity Required Per Disconnect Switch	Cat. No.
	C1, C2	2	**194R-LNC3**
	D1, D2	2	**194R-LNC4**
	E1, E2	2	**194R-LNC5**
	F1	2	**194R-LNC6**

∗ For use on either Line or Load Side of Disconnect Switch. Disconnect switch **Cat. Nos: 194R-NN**P3** and **194R-NJ**P3** are provided as standard with a line side terminal shield.

Terminal Lugs

	Disconnect Switch Dim Ref.	Conductor Range	Pkg. Qty.	Cat. No.
	D1 (Cat. No. 194R-NH100P3 only)	#8…1/0 AWG 10 mm²…50 mm²	3	**199-LE1**
	D1 (Cat. No. 194R-NJ200P3, -NN200P3, -NA400P3) D2	#6…250 MCM AWG 16 mm²…120 mm²		**199-LF1**
	E1, E2, F1	#4…500 MCM AWG 25 mm²…240 mm²		**199-LG1**
	F1	Two 1/0…350 MCM AWG Two 50 mm²…150 mm²		**199-LH1**

IEC Fused and Non-Fused Disconnects

Accessories, Continued

Auxiliary Contacts∗

Cat. No. 195-GA10

Disconnect Switch Dim Ref.	Description	No. of Auxiliary Contacts	Cat. No.
C1, C2, D1, D2, E1, E2, F1, F2	Auxiliary contact (side-mounted)‡	1 N.O.	**195-GA10**
		1 N.C.	**195-GA01**
C1, C2, D1, D2, E1, E2, F1, F2	Two-pole auxiliary contact for disconnect switch‡	1 N.O./1 N.C.	**195-GA11**
C1, C2, D1, D2, E1, E2, F1, F2	Two-pole N.O. auxiliary contact for disconnect switch 2 N.O.‡	2 N.O.	**195-GA20**
C1, C2, D1, D2, E1, E2, F1, F2	Two-pole N.C. auxiliary contact for disconnect switch‡	2 N.C.	**195-GA02**
C1, C2, D1, D2, E1, E2, F1, F2	Auxiliary support for 5…8 circuits per switch	—	**194R-A1**

∗ See page 2-439 for contact ratings.
‡ A maximum of four (4) contact blocks (8 auxiliary contacts) can be installed on each disconnect switch. When more than two (2) contact blocks are used, a support kit **Cat. No. 194R-A1** must be used.

Shorting Links For BS Switches Only

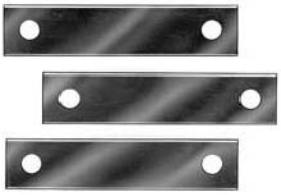

Disconnect Switch Dim Ref.	Description	For Use with Cat. No.	Cat. No.
D1	BS88 Size A4	194R-NA400P3	**194R-SLA4**
E1	BS88 Size B1, B2	194R-NB200P3	**194R-SLB2**
F1	BS88 Size B3, B4	194R-NB300P3	

Fused Disconnect Switches For BS88 Fuses

Electrical Ratings									
Cat. No.		194R-NA380P3		194R-NA400P3		194R-NB200P3		194R-NB300P3	
Fuse Type	BS88 Dimension	A3		A4		B1, B2		B1, B2, B3, B4	
Rated Insulation Voltage (U_i)	[V]	660		660		660		660	
Maximum Short Circuit Prospective Fault Current	[kA]	80		80		80		80	
Rated Operational Current AC-22A (I_e)		Fuse Links	Shorting Links	Fuse Links	Shorting Links	Fuse Links	Shorting Links	Fuse Links	Shorting Links
200/230V 50 Hz	[A]	100	100	200	160	250	250	400	400
380/400/415V 50 Hz	[A]	100	100	200	160	250	250	400	400
500V 50 Hz	[A]	100	100	200	160	250	250	400	400
660/690V 50 Hz	[A]	100	100	200	160	250	250	400	400
Rated Operational Current AC-23A (I_e)									
200/230V 50 Hz	[A]	75	75	130	130	240	240	300	300
380/400/415V 50 Hz	[A]	75	75	138	138	245	245	300	300
500V 50 Hz	[A]	65	65	130	130	220	220	290	290
660/690V 50 Hz	[A]	61	61	118	118	170	170	220	220
Rated Thermal Current (I_{the})	[A]	100	100	160	160	200	250	400	400
Maximum kW, AC-23A 3∅									
200/230V 50 Hz	[kW]	22	22	37	37	75	75	90	90
380/400/415V 50 Hz	[kW]	37	37	75	75	132	132	160	160
500V 50 Hz	[kW]	45	45	90	90	160	160	200	200
660/690V 50 Hz	[kW]	55	55	110	110	160	160	200	200
Maximum Fuse Rating	[A]	100	—	200	—	200	—	400	—
Maximum Motor Circuit Fuse Link		100M125	—	200M250	—	ED355	—	400M450	—
Maximum Fuse Cut-off Current✶	[kA]	14	14	20	20	33	33	40	40
Rated Short Time Current, 1 Second	[kA]	2		4		7.5		12	

Mechanical Data					
Cat. No.		194R-NA380P3	194R-NA400P3	194R-NB200P3	194R-NB300P3
Degree of Protection (per IEC 947) Switch Only Switch with Terminal Shield & Fuse Cover(s)		 IP00 IP20	 IP00 IP20	 IP00 IP20	 IP00 IP20
Mechanical Endurance❄	Operations	10 000	8 000	8 000	8 000
Operating Torque (Maximum)	N•m lb•in.	17.5 155	20.3 180	31.4 275	31.4 275
Terminal Capacity Power Terminals	mm² AWG	2.5…35 #14…#2	16…120 #6-250MCM	25…240 #4-500MCM	Two 50…150 Two 1/0…350MCM
Auxiliary Contact Terminals	mm² AWG	2.5…4 #14…#12	2.5…4 #14…#12	2.5…4 #14…#12	2.5…4 #14…#12
Maximum Number of Auxiliary Circuits		8	8	8	8
Approximate Weight	kg lbs.	4.03 8.88	6.16 13.59	9.30 20.50	23.83 30.50
Minimum Enclosure Size Approximate dimensions in millimeters (inches)	Height Width Depth	330 (13) 301 (11-27/32) 162 (6-3/8)	560 (22) 344 (13-17/32) 178 (7)	610 (24) 394 (15-33/64) 227 (8-15/16)	762 (30) 424 (16-45/64) 243 (9-9/16)
Switch Dimension Reference (See dimension drawings on pages 2-441 and 2-443…2-444.)		C1	D1	E1	F1

✶ Fuses must be selected with regard to the maximum prospective fault current of the system and the maximum cut-off current of the fuse when subjected to that maximum fault current. The maximum fuse cut-off current as specified for each disconnect switch must not be exceeded.

❄ Based on Rockwell Automation tests in accordance with the requirements as defined in IEC 60947-3.

Fused Disconnect Switches For DIN Fuses

Electrical Ratings					
Cat No.		194R-ND072P3	194R-ND138P3	194R-ND250P3	194R-ND300P3
Fuse Type	DIN Dimension	00	0, 00❄	1	1, 2
Rated Insulation Voltage (U_i)	[V]	660	660	660	660
Maximum Short Circuit Prospective Fault Current	[kA]	100	100	100	100
Rated Operational Current AC-22A (I_e)		Fuse Links	Fuse Links	Fuse Links	Fuse Links
200/230V 50 Hz	[A]	85	160	250	400
380/400/415V 50 Hz	[A]	85	160	250	400
500V 50 Hz	[A]	85	160	250	400
660/690V 50 Hz	[A]	85	160	250	400
Rated Operational Current AC-23A (I_e)					
200/230V 50 Hz	[A]	75	130	240	300
380/400/415V 50 Hz	[A]	72	138	245	300
500V 50 Hz	[A]	65	130	220	290
660/690V 50 Hz	[A]	61	118	170	220
Rated Thermal Current (I_{the})	[A]	85	160	250	400
Maximum kW, AC-23A 3Ø					
200/230V 50 Hz	[kW]	22	37	75	90
380/400/415V 50 Hz	[kW]	37	75	132	160
500V 50 Hz	[kW]	45	90	160	200
660/690V 50 Hz	[kW]	55	110	160	200
Maximum Fuse Rating	[A]	100	200	250	400
Maximum Motor Circuit Fuse Link		100	200	250	400
Maximum Fuse Cut-off Current∗	[kA]	14	20	33	40
Rated Short Time Current, 1 Second	[kA]	2	4	7.5	12

Mechanical Data					
Cat. No.		194R-ND072P3	194R-ND138P3	194R-ND250P3	194R-ND300P3
Degree of Protection (per IEC 947) Switch Only Switch with Terminal Shield & Fuse Cover(s)		 IP00 IP20	 IP00 IP20	 IP00 IP20	 IP00 IP20
Mechanical Endurance❄	Operations	10 000	8 000	8 000	8 000
Operating Torque (Maximum)	N•m lb•in.	17.5 155	20.3 180	31.4 275	31.4 275
Terminal Capacity Power Terminals	mm^2 AWG	2.5…35 #14…#2	16…120 #6…250MCM	25…240 #4…500MCM	Two 50…150 Two 1/0…350MCM
Auxiliary Contact Terminals	mm^2 AWG	2.5…4 #14…#12	2.5…4 #14…#12	2.5…4 #14…#12	2.5…4 #14…#12
Maximum Number of Auxiliary Circuits		8	8	8	8
Approximate Weight	kg lbs.	4.15 9.16	6.17 13.61	9.41 20.75	14.06 31.00
Minimum Enclosure Size Approximate dimensions in millimeters (inches)	Height Width Depth	330 (13) 301 (11-27/32) 168 (6-5/8)	560 (22) 344 (13-17/32) 183 (7-7/32)	712 (28) 394 (15-33/64) 227 (8-15/16)	762 (30) 424 (16-45/64) 243 (9-9/16)
Switch Dimension Reference (See dimension drawings on pages 2-441 and 2-443…2-444.)		C2	D2	E2	F1

∗ Fuses must be selected with regard to the maximum prospective fault current of the system and the maximum cut-off current of the fuse when subjected to that maximum fault current. The maximum fuse cut-off current as specified for each disconnect switch must not be exceeded.

❄ Based on Rockwell Automation tests in accordance with the requirements as defined in IEC 60947-3.

Fused Disconnect Switches For CSA HRCII-C Fuses

Electrical Ratings				
Cat. No.		194R-NH100P3	194R-NH200P3	194R-NH400P3
CSA Fuse Type		HRCII-C	HRCII-C	HRCII-C
Maximum Fuse Cartridge Size	[A]	100	200	400
Maximum Voltage AC	[V]	600	600	600
Ampere Rating	[A]	100	200	400
Maximum Short Circuit Prospective Fault Current	[kA]	100	100	100
Maximum Hp, 3Ø AC				
200V 60 Hz	[Hp]	25	50	100
230V 60 Hz	[Hp]	30	60	125
460V 60 Hz	[Hp]	60	125	250
575V 60 Hz	[Hp]	75	150	300
Maximum Hp, 1Ø AC				
115V 60 Hz	[Hp]	—	—	—
230V 60 Hz	[Hp]	15	30	50

Mechanical Data				
Cat. No.		194R-NH100P3	194R-NH200P3	194R-NH400P3
Degree of Protection (per IEC 947) Switch Only Switch with Terminal Shield & Fuse Cover(s)		 IP00 IP20	 IP00 IP20	 IP00 IP20
Mechanical Endurance∗	Operations	10 000	8 000	8 000
Operating Torque (Maximum)	N•m lb•in.	20.3 180	31.4 275	31.4 275
Terminal Capacity				
Power Terminals	mm^2 AWG	10…50 #8…#1/0	25…240 #4…500MCM	Two 50…150 Two 1/0…350MCM
Auxiliary Contact Terminals	mm^2 AWG	2.5…4 #14…#12	2.5…4 #14…#12	2.5…4 #14…#12
Maximum Number of Auxiliary Circuits		8	8	8
Approximate Weight	kg lbs.	6.16 13.59	9.30 20.50	13.83 30.50
Minimum Enclosure Size Approximate dimensions in millimeters (inches)	Height Width Depth	384 (15-1/8) 344 (13-17/32) 178 (7)	610 (24) 394 (15-33/64) 227 (8-15/16)	762 (30) 424 (16-45/64) 243 (9-9/16)
Switch Dimension Reference (See dimension drawings on 2-441, 2-442, and 2-443.)		D1	E1	F1

∗ Based on Rockwell Automation tests in accordance with the requirements as defined in CSA C22.2 No. 4 and IEC 60947-3.

Fused Disconnect Switches For CSA HRCI-J and UL Class Fuses❄

Electrical Ratings							
Cat. No.		194R-NJ100P3		194R-NJ200P3		194R-NJ400P3	
CSA Fuse Type/UL Fuse Type		HRCI-J/Class J		HRCI-J/Class J		HRCI-J/Class J	
Maximum Fuse Cartridge Size	[A]	100		200		400	
Maximum Voltage AC DC	[V] [V]	600 250		600 250		600	
Ampere Rating	[A]	100		200		400	
Maximum Short Circuit Prospective Fault Current	[kA]	100		100		100	
Fuse Operating Characteristics		Time Delay	Non-Time Delay	Time Delay	Non-Time Delay	Time Delay	Non-Time Delay
Maximum Hp, 3Ø AC							
200V 60 Hz	[Hp]	25	15	50	25	100	50
230V 60 Hz	[Hp]	30	15	60	25	125	50
460V 60 Hz	[Hp]	60	25	125	50	250	100
575V 60 Hz	[Hp]	75	30	150	60	300	125
Maximum Hp, 1Ø AC							
115V 60 Hz	[Hp]	7.5	—	—	—	—	—
230V 60 Hz	[Hp]	15	7.5	25	15	50	25
Maximum Hp, DC							
125V DC	[Hp]	—	—	—	—	—	—
250V DC	[Hp]	20	20	40	40	50	50

❄ Only CSA Certified HRCI-J and HRCI-MISC (also UL Listed as Class CC) fuses and UL Listed Class J and CC fuses are suitable for use with these disconnect switches.

Fused Disconnect Switches For CSA HRCI-J and UL Class Fuses∗, Continued

Mechanical Data				
Cat. No.		194R-NJ100P3	194R-NJ200P3	194R-NJ400P3
Degree of Protection (per IEC 947) Switch Only Switch with Terminal Shield & Fuse Cover(s)		 IP00 IP20	 IP00 IP20	 IP00 IP20
Mechanical Endurance‡	Operations	10 000	8 000	8 000
Operating Torque (Maximum)	N•m lb•in.	17.5 155	20.3 180	31.4 275
Terminal Capacity Power Terminals	mm^2 AWG	2.5…35 #14…#2	16…120 #6…250MCM	Two 50…150 Two 1/0…350MCM
Auxiliary Contact Terminals	mm^2 AWG	2.5…4 #14…#12	2.5…4 #14…#12	2.5…4 #14…#12
Maximum Number of Auxiliary Circuits		8	8	8
Approximate Weight	kg. lbs.	4.12 9.08	6.16 13.59	13.83 30.50
Minimum Enclosure Size Approximate dimensions in millimeters (inches)	Height Width Depth	330 (13) 301 (11-27/32) 162 (6-3/8)	560 (22) 344 (13-17/32) 178 (7)	762 (30) 424 (16-45/64) 243 (9-9/16)
Switch Dimension Reference (See dimension drawings on 2-441, 2-443 and 2-443.)		C1	D1	F1

∗ Only CSA Certified HRCI-J) fuses and UL Listed Class J fuses are suitable for use with these disconnect switches.
‡ Based on Rockwell Automation tests in accordance with the requirements as defined in CSA C22.2 No. 4, IEC 60947-3 and UL 98.

Non-Fused Disconnect Switches For CSA and UL Class Applications§

Electrical Ratings							
Cat. No.		194R-NN100P3		194R-NN200P3		194R-NN400P3	
Maximum Fuse Cartridge Size		100♣		200♣		400♣	
Maximum Voltage	AC [V] DC [V]	600 250		600 250		600 250	
Ampere Rating	[A]	100		200		400	
Maximum Short Circuit Prospective Fault Current	[kA]	100		100		100	
Fuse Operating Characteristics➢		Time Delay	Non-Time Delay	Time Delay	Non-Time Delay	Time Delay	Non-Time Delay
Maximum Hp, 3Ø AC	200V 60 Hz [Hp] 230V 60 Hz [Hp] 460V 60 Hz [Hp] 575V 60 Hz [Hp]	25 30 60 75	15 15 25 30	50 60 125 150	25 25 50 60	100 125 250 300	50 50 100 125
Maximum Hp, 1Ø AC	115V 60 Hz [Hp] 230V 60 Hz [Hp]	— 15	— 15	— 25	— 15	— 50	— 25
Maximum Hp, DC	125V DC [Hp] 250V DC [Hp]	— 20	— 20	— 40	— 40	— 50	— 50
Power Lost	[W]	20		40		80	

§ Non-fused disconnect switches must be used with separately installed CSA Certified HRCI-J or HRCI-T fuses; or UL Listed Class J or T fuses.
♣ When using CSA HRCI-J or HRCI-T fuses, and UL Class J or T fuses.
➢ Based on Rockwell Automation tests in accordance with the requirements as defined in CSA C22.2 No. 4, IEC 947-3 and UL 98.

Non-Fused Disconnect Switches For CSA and UL Class Applications∗, Continued

Mechanical Data				
Cat. No.		194R-NN100P3	194R-NN200P3	194R-NN400P3
Degree of Protection (per IEC 947) Switch Only Switch with Terminal Shield & Fuse Cover(s)		IP00 IP20	IP00 IP20	IP00 IP20
Mechanical Endurance‡	Operations	10 000	8 000	8 000
Operating Torque, Max.	N•m (lb•in.)	17.5 (155)	20.3 (180)	31.4 (275)
Terminal Capacity Power Terminals	mm^2 AWG	2.5…35 #14…#2	16…120 #6…250MCM	Two 50…150 Two 1/0…350MCM
Auxiliary Contact Terminals	mm^2 AWG	2.5…4 #14…#12	2.5…4 #14…#12	2.5…4 #14…#12
Maximum Number of Auxiliary Circuits		8	8	8
Approximate Weight	kg lbs.	4.31 9.50	6.56 14.47	14.97 33.00
Minimum Enclosure Size Approximate dimensions in millimeters (inches)	Height Width Depth	330 (13) 301 (11-27/32) 162 (6-3/8)	560 (22) 344 (13-17/32) 178 (7)	762 (30) 424 (16-45/64) 243 (9-9/16)
Switch Dimension Reference (See dimension drawings on 2-441, 2-443 and 2-443.)		C1	D1	F1

∗ Non-fused disconnect switches must be used with separately installed CSA Certified HRCI-J, HRCI-T fuses; or UL Listed Class J or T fuses.
‡ Based on Rockwell Automation tests in accordance with the requirements as defined in CSA C22.2 No. 4, IEC 60947-3, and UL 98.

All Bulletin 194R Disconnect Switches, 100 A, 200 A, 400 A Range

Environmental Data	
Ambient Temperature	
Open Enclosed Storage	–2…+55 °C (–4…+131 °F) –20…+40 °C (–4…+104 °F) –40…+65 °C (–40…+149 °F)
Altitude (per IEC 947-1)	2,000
Relative Humidity (per IEC 947-1)	90% @ +20 °C (+68 °F) 50% @ +40 °C (+104 °F)

Auxiliary Contact Ratings for Cat. No. 195-GA

AC11 Rating		DC11 Rating	
U_e [V]	I_e [A]	U_e [V]	I_e [A]
12…120	6	28	5.0
220…240	3	110	1.25
380…480	1.5	220	0.62
500…600	1.2	440	0.27
		600	0.20

Thermal Current — 10 Amperes. EEMAC/NEMA A600, P300.
Insulation Voltage IEC (U_i) — 660.

Wiring Schematic

U.L. CSA LISTED SWITCHES	DIMENSION REFERENCE	CIRCUIT
Cat. No.		
194R-NH100P3 **194R-NH200P3** **194R-NH400P3** **194R-NJ100P3** **194R-NJ100P3** **194R-NJ100P3**	**D1** **E1** **F1** **C1** **D1** **F1**	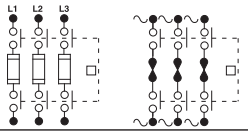
194R-NN100P3 **194R-NN200P3** **194R-NN400P3**	**C1** **D1** **F1**	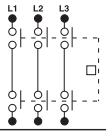

OTHER SWITCHES	DIMENSION REFERENCE	CIRCUIT
Cat. No.		
194R-NA380P3 **194R-NA400P3** **194R-NB200P3** **194R-NB300P3**	**C1** **D1** **E1** **F1**	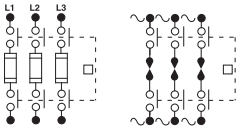

Renewal Parts

Hardware Kits (Includes switch/fuse mounting hardware and operating rod cotter pin)

Disconnect Switch		Hardware Kit Part No.
Cat. No.	Dim. Ref.	
194R-NA380P3 194R-NN100P3 194R-NJ100P3	C1, C2	41022-800-03 41022-800-02 41022-800-01
194R-NA400P3 194R-NN200P3 194R-NJ200P3 194R-ND072P3	D1, D2	41022-800-07 41022-800-06 41022-800-05 41022-800-04

Disconnect Switch		
Cat. No.	Dim. Ref.	Hardware Kit Part No.
194R-NH200P3 194R-ND250P3 194R-NB200P3 194R-NH100P3 194R-ND138P3	E1, E2	41022-800-12 41022-800-11 41022-800-10 41022-800-09 41022-800-08
194R-NH400P3 194R-ND300P3 194R-NB300P3 194R-NN400P3 194R-NJ400P3	F1	41022-800-17 41022-800-16 41022-800-15 41022-800-14 41022-800-13

Disconnect Switch Dimension References C1, C2, D1, D2, E1, E2 and F1 (100, 200, and 400 A)

Dimensions in millimeters (inches). Dimensions are not intended to be used for manufacturing purposes.

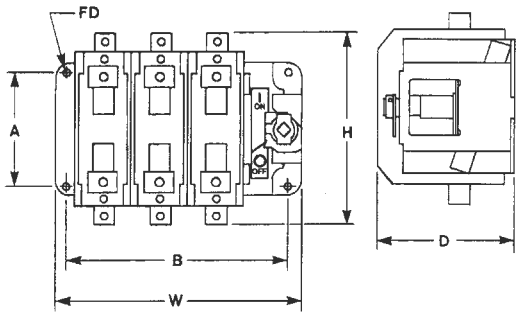

Disconnect Switch Dimension Reference	Approximate Dimensions					
	H	W	D	A	B	FD
C1	148 (5-53/64)	194 (7-41/64)	130 (5-7/64)	106 (4-11/64)	170 (6-11/16)	4-M6 (4-1/4)
C2	148 (5-53/64)	194 (7-41/64)	136 (5-23/64)	106 (4-11/64)	170 (6-11/16)	4-M6 (4-1/4)
D1	184 (7-1/4)	236 (9-19/64)	148 (5-53/64)	106 (4-11/64)	212 (8-11/32)	4-M6 (4-1/4)
D2	184 (7-1/4)	236 (9-19/64)	153 (6-1/64)	106 (4-11/64)	212 (8-11/32)	4-M6 (4-1/4)
E1	220 (8-21/32)	278 (10-15/16)	213 (8-25/64)	150 (5-29/32)	252 (9-59/64)	4-M8 (4-5/16)
E2	220 (8-21/32)	278 (10-15/16)	213 (8-25/64)	150 (5-29/32)	252 (9-59/64)	4-M8 (4-5/16)
F1	250 (9-27/32)	308 (12-1/8)	213 (8-25/64)	150 (5-29/32)	282 (11-7/64)	4-M8 (4-5/16)

Operating Handles — Cat. No. 194R-HM…/190-HM

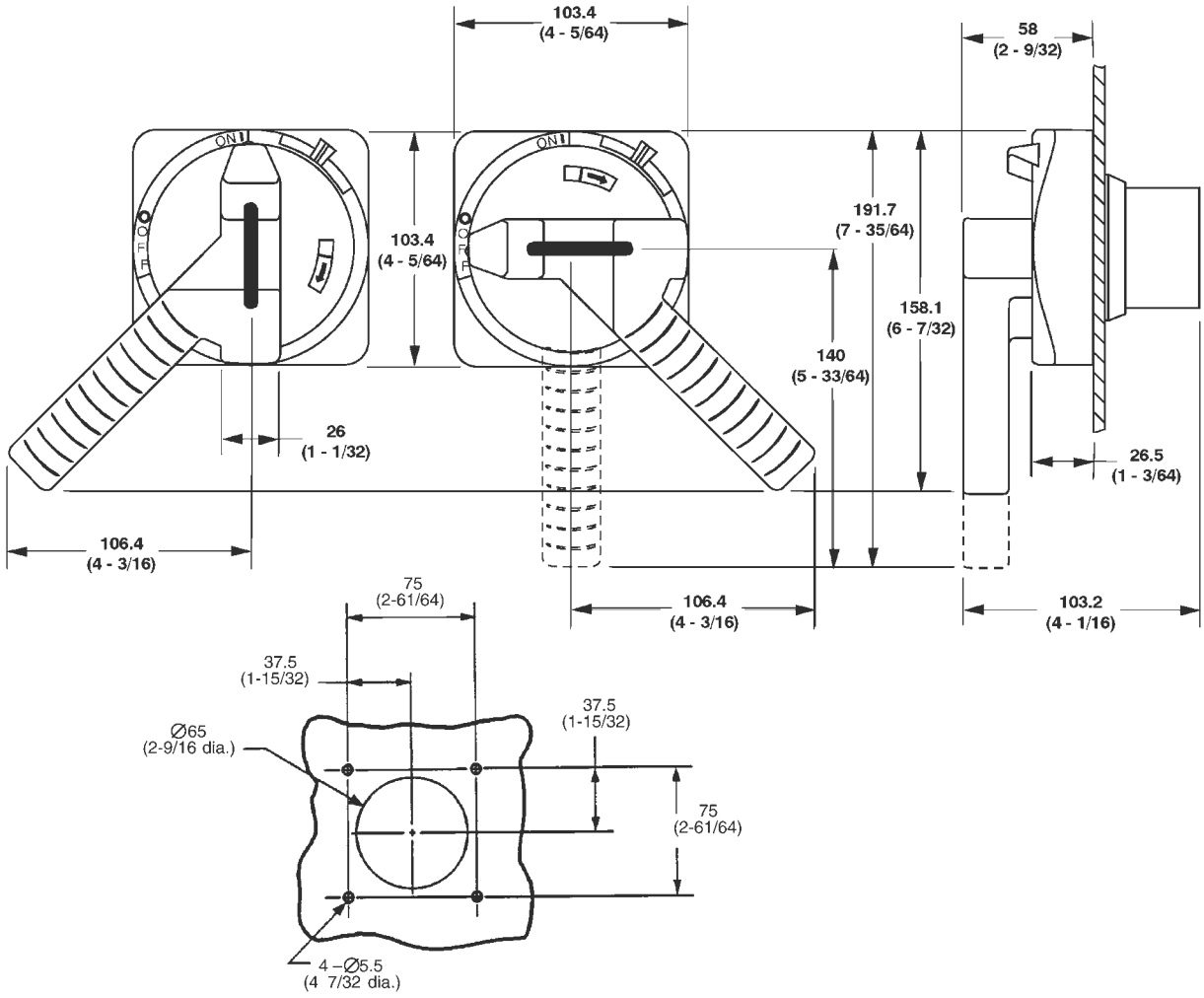

Disconnect Switch Dim. Ref.: C1, C2, D1, D2 (100 A and 200 A)

Dimensions in millimeters (inches). Dimensions are not intended to be used for manufacturing purposes.

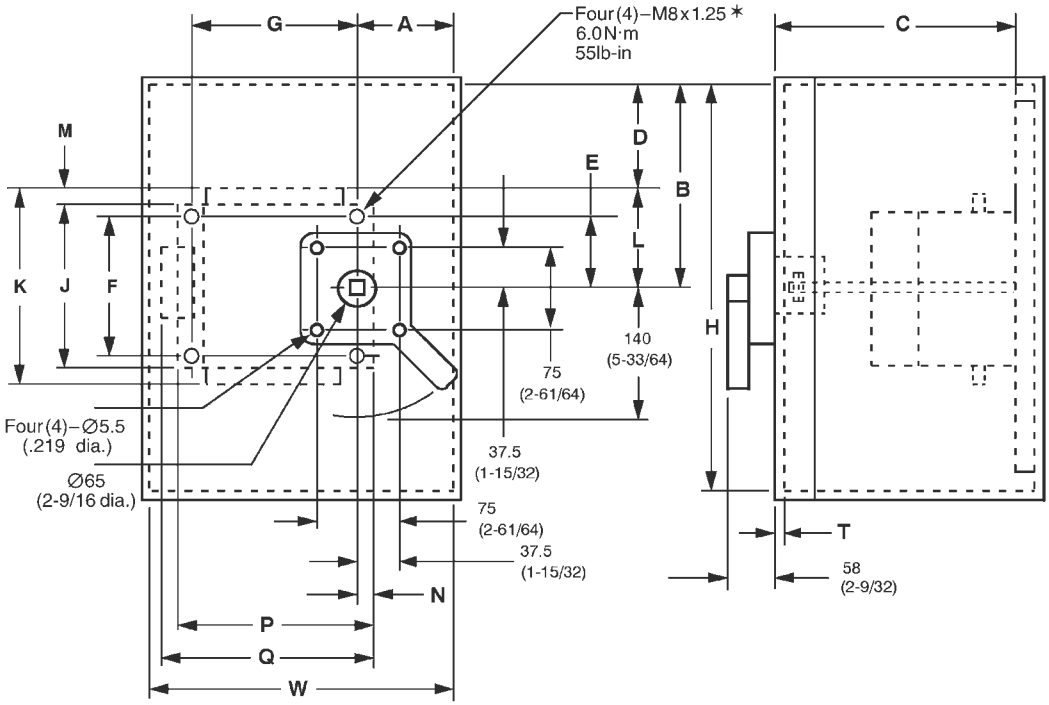

✶The switch is capable of accepting four (4)Ø 6.4 (1/4 dia.) screws for mounting.

NFPA 79 Operating Handles/Shafts Cat. Nos. 194R-NHR...

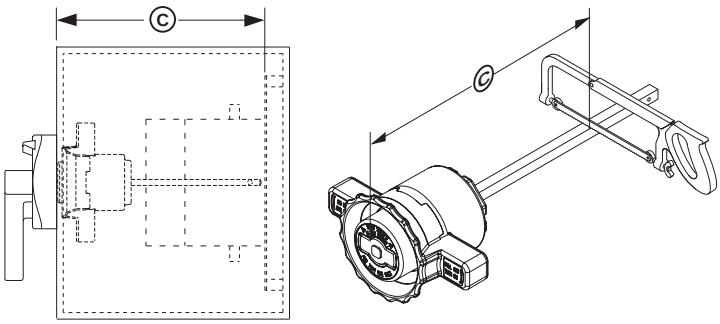

Disconnect			C
194R-NH100_ _ **194R-NJ100_ _** **194R-NN100_ _**	**194R-NJ200_ _** **194R-NN200_ _** **194R-NA400_ _**	**194R-NA380_ _** **194R-ND072_ _** **194R-ND138_ _**	≥ **216 mm** **8.5 in**
194R-NB200_ _ **194R-NB300_ _** **194R-ND250_ _**	**194R-ND300_ _** **194R-NH200_ _** **194R-NH400_ _**	**194R-NJ400_ _** **194R-NN400_ _**	≥ **305 mm** **12.0 in**

Enclosure Installation Dimensions

Dimension Reference	A	B	C		H	T		W	
								Minimum	
	Minimum	Minimum	Minimum	Maximum	Minimum	Minimum	Maximum	Single Pole Aux. Cont.	Two Pole Aux. Cont.
C1	108 (4-1/4)	162 (6-3/8)	162 (6-3/8)	457 (18)	330 (13)	1.6 (1/16)	4.8 (3/16)	301 (11-27/32)	313 (12-5/16)
C2	108 (4-1/4)	162 (6-3/8)	168 (6-5/8)	457 (18)	330 (13)	1.6 (1/16)	4.8 (3/16)	301 (11-27/32)	313 (12-5/16)
D1	108 (4-1/4)	280 (11)	178 (7)	457 (18)	560 (22)	1.6 (1/16)	4.8 (3/16)	344 (13-17/32)	356 (14)
D2	108 (4-1/4)	280 (11)	183 (7-7/32)	457 (18)	560 (22)	1.6 (1/16)	4.8 (3/16)	344 (13-17/32)	356 (14)

Dimensions in millimeters (inches). Dimensions are not intended to be used for manufacturing purposes.

Disconnect Switch and Operating Handle Installation Dimensions

Dimension Reference	D	E	F	G	J	K	L	M	N	P	Q
C1, C2	74 (2-29/32)	53 (2-3/32)	106 (4-3/16)	170 (6-11/16)	148 (5-53/64)	176 (6-15/16)	88 (3-15/32)	13.5 (17/32)	12.7 (1/2)	194 (7-41/64)	206 (8-7/64)
D1, D2	162 (6-23/64)	53 (2-3/32)	106 (4-3/16)	212 (8-11/32)	184 (7-1/4)	236 (9-9/32)	118 (4-41/64)	26 (1-1/32)	12.7 (1/2)	236 (9-19/64)	248 (9-49/64)

Disconnect Switch Dim. Ref.: E1, E2, F1 (200 and 400 A)

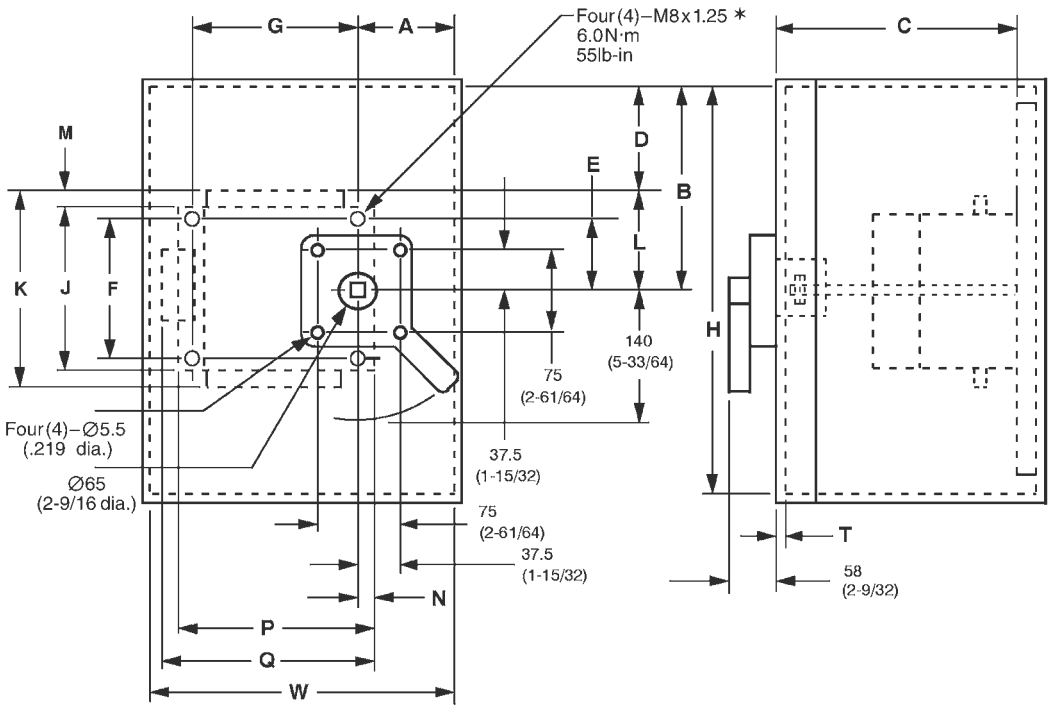

* The switch is capable of accepting four (4)Ø 7.9 (5/16 dia.) screws for mounting.

Enclosure Installation Dimensions

Dimension Reference	A	B	C		H	T		W	
								Minimum	
	Minimum	Minimum	Minimum	Maximum	Minimum	Minimum	Maximum	Single Pole Aux. Cont.	Two Pole Aux. Cont.
E1	108 (4-1/4)	305 (12)	227 (8-15/16)	610 (24)	610 (24)	1.6 (1/16)	4.8 (3/16)	394 (15-33/64)	406 (16)
E2	108 (4-1/4)	356 (14)	227 (8-15/16)	610 (24)	712 (28)	1.6 (1/16)	4.8 (3/16)	394 (15-33/64)	406 (16)
F1	108 (4-1/4)	381 (15)	243 (9-9/16)	610 (24)	762 (30)	1.6 (1/16)	4.8 (3/16)	606 (23-7/8)	606 (23-7/8)

Disconnect Switch and Operating Handle Installation Dimensions

Dimension Reference	D	E	F	G	J	K	L	M	N	P	Q
E1	158 (6-7/32)	75 (2-61/64)	150 (5-29/32)	252 (9-59/64)	220 (8-21/32)	294 (11-37/64)	147 (5-25/32)	37 (1-29/64)	14 (35/64)	278 (10-15/16)	290 (11-13/32)
E2	209 (8-7/32)	75 (2-61/64)	150 (5-29/32)	252 (9-59/64)	220 (8-21/32)	294 (11-37/64)	147 (5-25/32)	37 (1-29/64)	14 (35/64)	278 (10-15/16)	290 (11-13/32)
F1	202 (7-61/64)	75 (2-61/64)	150 (5-29/32)	282 (11-7/64)	250 (9-27/32)	358 (14-3/32)	179 (7-3/64)	54 (2-1/8)	14 (35/64)	308 (12-1/8)	320 (12-19/32)

IP66 (Type 3/4/12) Watertight, Dusttight Sheet Metal Enclosure

Dimensions in millimeters (inches). Dimensions are not intended to be used for manufacturing purposes.

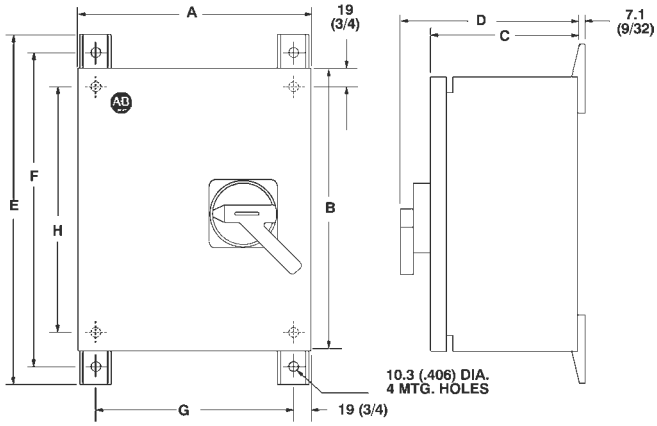

External Mounting Feet Optional Cat. No. 198-F3

[A]	Type	Dim. Ref.	A	B	C	D	E	F	G	H
200	Non-Fused & Fused	D1	406 (16)	610 (24)	224 (8-51/64)	282 (11-5/64)	688 (27-5/64)	648 (25-1/2)	368 (14-1/2)	572 (22-1/2)
400	Non-Fused & Fused	F1	610 (24)	762 (30)	326 (12-51/64)	384 (15-5/64)	840 (33-5/64)	800 (31-1/2)	572 (22-1/2)	724 (28-1/2)

Type 4/4X Watertight, Corrosion-Resistant Stainless Steel Enclosure

Dimensions in millimeters (inches). Dimensions are not intended to be used for manufacturing purposes.

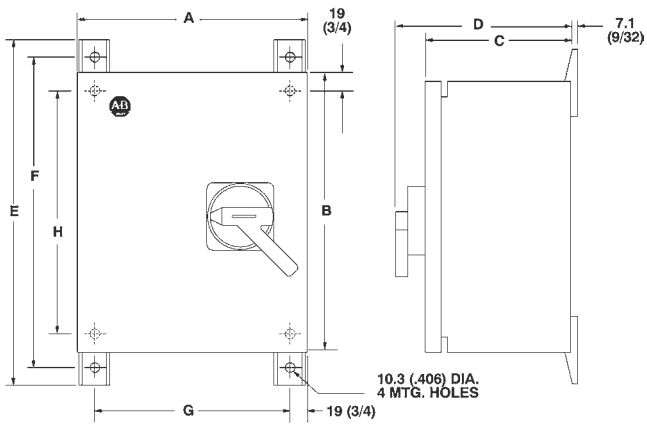

External Mounting Feet Optional Cat. No. 198-F3

[A]	Type	Dim. Ref.	A	A1	B	C	D	E	F	G	H
100	Non-Fused & Fused	C1	508 (20)	—	406 (16)	224 (8-51/64)	282 (11-7/64)	484 (19-5/64)	444 (17-1/2)	470 (18-1/2)	368 (14-1/2)
200	Non-Fused & Fused	D1	406 (16)	—	610 (24)	224 (8-51/64)	282 (11-5/64)	484 (19-5/64)	444 (17-1/2)	572 (22-1/2)	368 (14-1/2)
400	Non-Fused & Fused	F1	610 (24)	—	762 (30)	326 (12-51/64)	384 (15-5/64)	840 (33-5/64)	800 (31-1/2)	572 (22-1/2)	724 (28-1/2)

IP66 (Type 3/4/4X/12) Corrosion Resistant, Non-Metallic Enclosure

Dimensions in millimeters (inches). Dimensions are not intended to be used for manufacturing purposes.

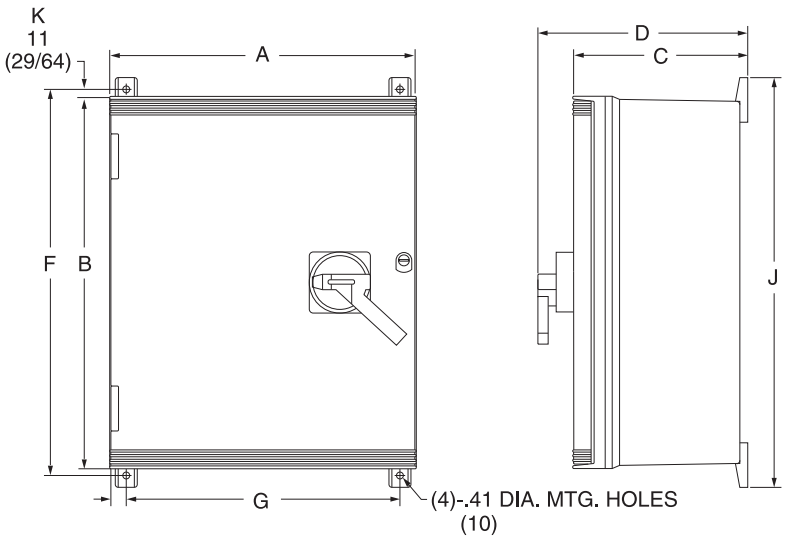

Cat. No. 194R-K_200P3 200 A Switch

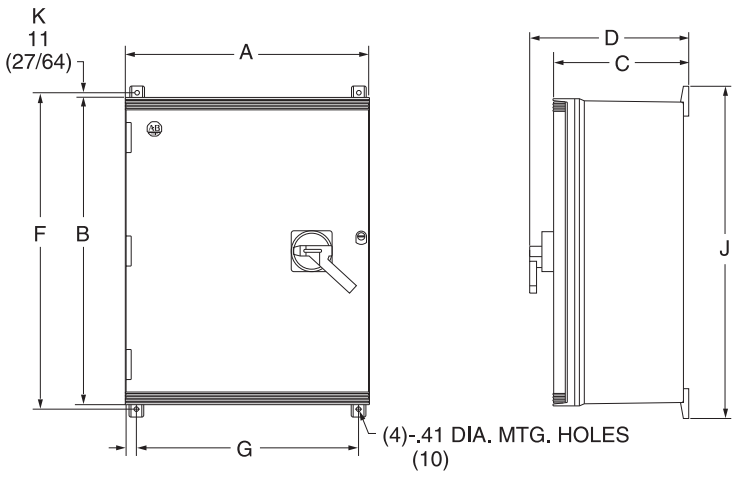

Cat. No. 194R-K_400P3 400 A Switch

Switch Size [A]	A	B	C	D	F	G	J	K
200	513 (20-13/64)	625 (24-5/8)	292 (11-31/64)	350 (13-25/32)	648 (25-1/2)	457 (18)	686 (27)	11 (7/16)
400	612 (24-1/8)	775 (30-33/64)	342 (13-31/64)	401 (15-25/32)	796 (31-11/32)	555 (21-7/8)	834 (32-27/32)	11 (27/64)

IEC Fused and Non-Fused Disconnects

Overview/Catalog Number Explanation

Bulletin 194RS Preassembled Side-Mount Disconnect Switch

Bulletin 194RS NFPA 79 Compliant IEC Fused and Non-Fused Disconnects, Side-Mounted Style

- 30/60 A sizes
- Open switches
- Fused switch versions:
  - UL Class J, UL Class CC
- Non-fused switches
- Operating handle ingress ratings:
  - IP66 (Type 3R, 3, 12, 4, 4X)
- Pre-assembled, side-mounting bracketed disconnect interlock
- Padlockable handle

The Bulletin 194RS side-mount handle provides NFPA 79 compliancy with a bracketed switch and interlock system that is another Allen-Bradley exclusive. The 194R rotary handle is mounted to the side of the enclosure and attaches to the 194R bracketed disconnect and interlock mechanism. The side handle remains connected to the switch and interlock mechanism at all times. This solution provides the single, side handle design with the NFPA 79 compliancy of the secondary interlock.

Table of Contents

Standards Compliance for Disconnect Switch

IEC 60947-4-1/EN60947-3
BS EN60947-3
VDE 0660
CSA 22.2 No. 4
NEMA KS-1
UL 489

Standards Compliance for Pre-Assembled Side-Mount Handle Mechanism with Disconnect Switch

UL 98
CSA 22.2 No. 4

Standards Compliance for Enclosed Pre-Assembled Side-Mount Handle Mechanism with Disconnect Switch

UL 98
CSA 22.2 No. 4

Certifications

UL Listed (File No. E119349, Guide WJAZ)
CSA Certified (File No. LR1234)
CE
ASTA Certified
LOVAG Certified

Certifications for Pre-Assembled Side-Mount Handle Mechanism with Disconnect Switch

UL Listed (File No. E47426, Guide WHTY)
CSA Certified (File No. LR1234)

Certifications for Enclosed Pre-Assembled Side-Mount Handle Mechanism with Disconnect Switch

UL Listed (File No. E 227497, Guide WIAX)
CSA Certified (File No. LR1234)

Cat. No. Explanation

194RS	–	N	J	060	4E
a		*b*	*c*	*d*	*f*

a

Code	Description
194RS	Side-Mounted Disconnect Switch with interlock

b

Code	Enclosure Type
N	Open

c

Code	Fuse Type
C	CC Fuse (30 A)
J	J Fuse (30…400 A)
N	Non-Fused

d

Code	Load Size (Class CC, J, Non-Fused)
030	30 A
060	60 A

e ∗

Code	Handle Type
4	Type 4/4X Black
4E	Type 4/4X, Red/Yellow

∗ Side-mounted mechanism assembly and component gaskets meet UL Type 1/12 enclosure ratings at this time, even though handle meets UL 4/4X.

Dimensions in millimeters (inches). Dimensions are not intended to be used for manufacturing purposes.

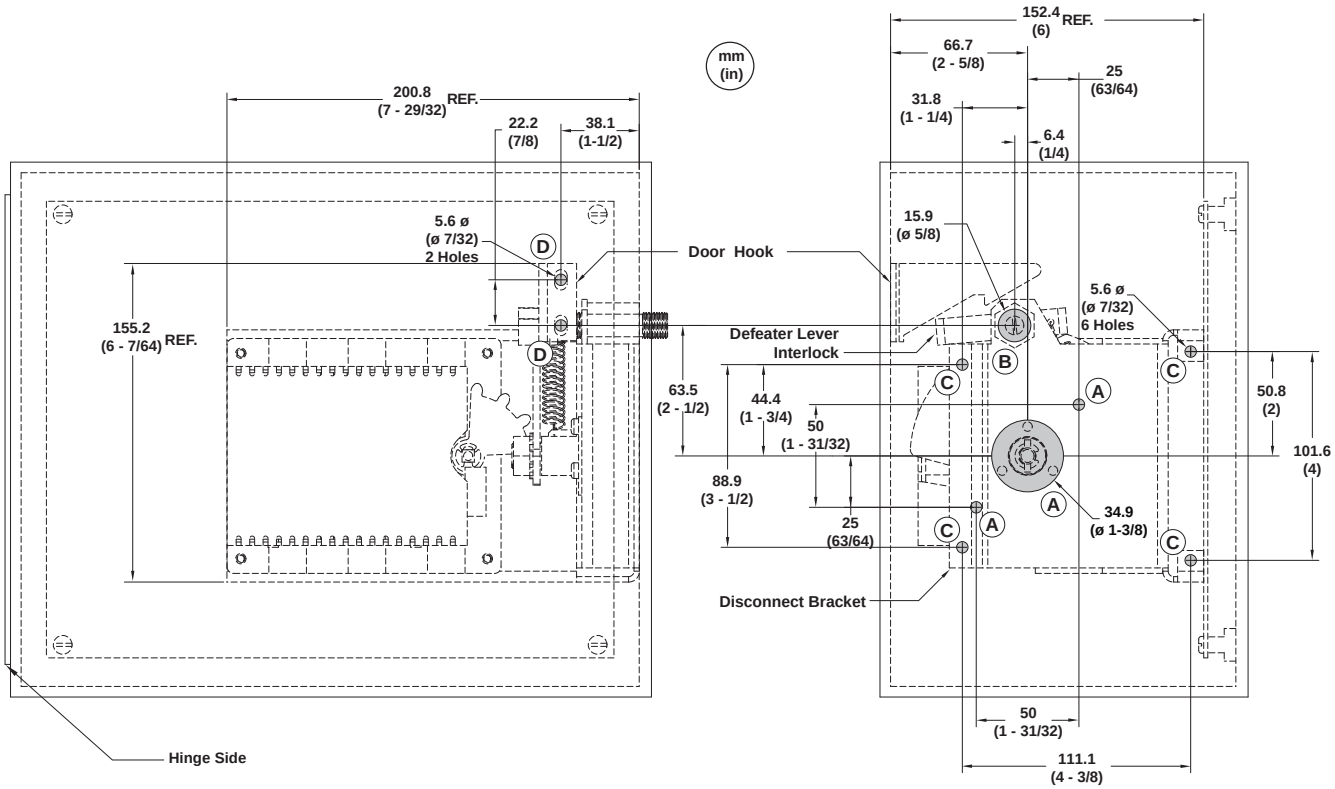

FRONT VIEW

RIGHT SIDE VIEW

NOTE: 1) All dimensions reference inside wall.
2) Assembly and component gaskets meet UL Type 1/12 enclosure ratings.

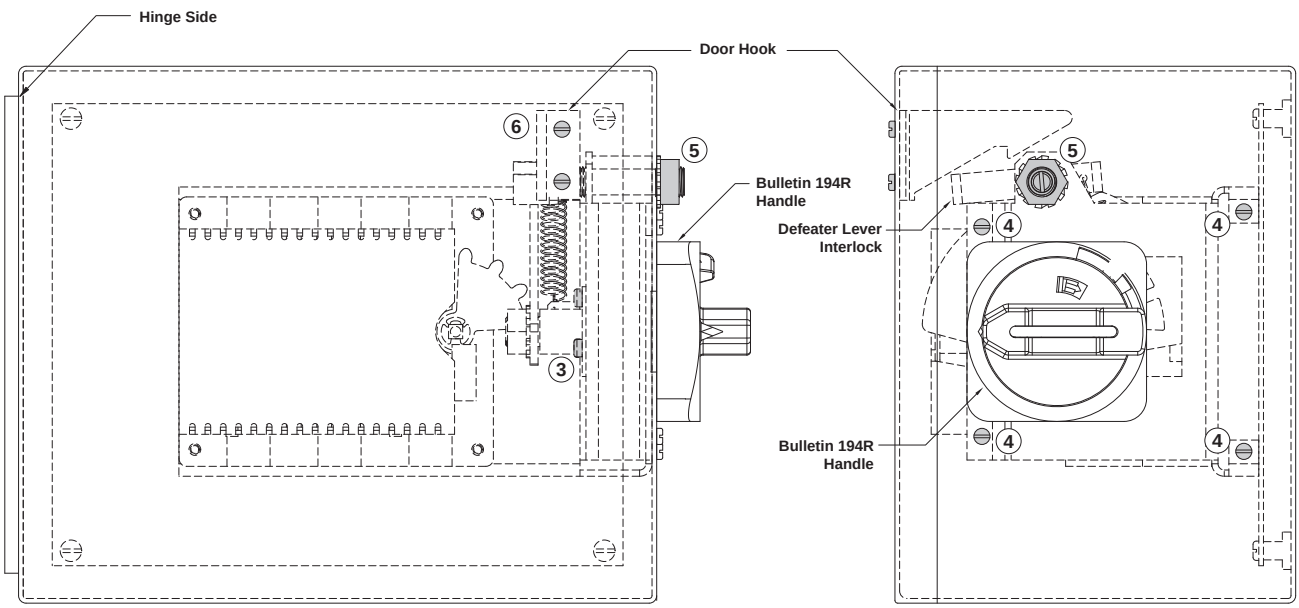

FRONT VIEW

RIGHT SIDE VIEW

IEC Fused and Non-Fused Disconnects

Overview/Catalog Number Explanation

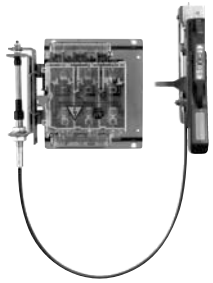

Bulletin 194RC NFPA 79 Compliant IEC Fused and Non-Fused Disconnects with Cable-Operated Handle for Flange-Style Enclosures

- 30 A size
- Open switches
- Fused switch versions:
  - UL Class J, UL Class CC
- Non-fused switches
- Uses Bulletin 1494F handles
  - IP66 (Type 3R, 3, 12, 4, 4X)
- Pre-assembled cable-operated disconnect with interlock
- Padlockable handle mounts to flange-styled enclosures
- Cable options available in 3…10 ft. lengths
- NFPA 2002 Compliant

Table of Contents

Standards Compliance for Disconnect Switch

IEC 60947-4-1/EN60947-3
BS EN60947-3
VDE 0660
CSA 22.2 No. 4
NEMA KS-1
UL 98

Certifications

UL Listed (File No. E 47426, Guide WHTY)
CSA Certified (File No. LR1234)
CE
ASTA Certified
LOVAG Certified

The Bulletin 194RC cable-operated disconnect with interlock is another Rockwell Automation Allen-Bradley exclusive, providing a fully compliant solution to the 2002 changes in the National Fire Protection Association 79 (NFPA 79).

The new 194RC combines the small size of the 194R IEC disconnect with the flexibility of a cable-operated mechanism to provide an NFPA 79 IEC solution for flange style enclosures. The 194RC bracketed mechanism for 194R 30 A devices attaches to the current 194R disconnect switch base and operates the ON-OFF action via cable to a standard 1494F handle.

The 194RC handle/interlock mechanism provides the 'no-tools' operation and the secondary interlock as required by NFPA 79 2002 changes. The 194RC cable-operated disconnect is offered in 3…10 ft cable lengths, allowing a variety of placement options for the 194R disconnect within the enclosure. The handle is available in 3 different styles: plastic, stainless steel, or painted metal.

Cat. No. Explanation

194RC	–	N	J	030	P	4
a		*b*	*c*	*d*	*e*	*f*

a

Bulletin Number	
Code	Description
194RC	Cable-Operated Disconnect Switch with handle

b

Enclosure Type	
Code	Description
N	Open

c

Fuse Type	
Code	Description
C	CC Fuse (30 A)
J	J Fuse (30 A or 60 A)*
N	Non-Fused

d

Load Size	
Code	Description (Class CC, J, Non-Fused)
030	30 A
060	60 A

e

Handle Type	
Code	Description
P	Type 4/4X Black Plastic
M	Type 12 Metal
S	Type 4/4X Stainless Steel

f

Cable Length	
Code	Description
3	3 ft.
4	4 ft.
6	6 ft.
10	10 ft.

* 194RC 60 A version is under development at this time.

Bulletin 194RC Installation

1. Install disconnect switch with four #10-32 screws (see ***Figure 1***).

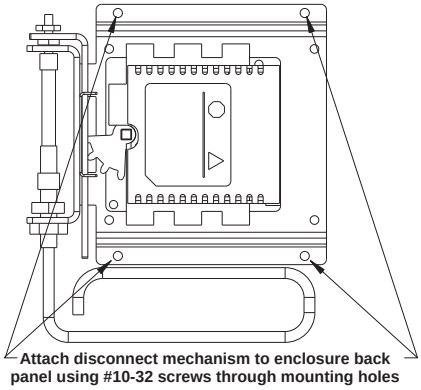

Figure 1 *Attaching Disconnect to Enclosure Back Panel*

2. Install handle to enclosure by placing the outer handle mechanism with the attached gasket over the enclosure cutout. Insert the top mounting screw with lockwasher through the enclosure and thread it into the outer handle mechanism for a few turns but not all the way (see ***Figure 2***).
3. Slide the toggle mechanism assembly over the top handle mounting screw. Insert the bottom handle mounting screw and lockwasher through the toggle mechanism assembly, through the enclosure and into the handle. Tighten both mounting screws to specified torque (see ***Figure 2***).
4. Assemble adapter link to actuator link. Tighten to specified torque (see ***Figure 3***).
5. Align adapter link with the bell crank. Attach bell crank to adapter link with shoulder bolt and nut. Tighten to specified torque (see ***Figure 4***).
6. Mount door hasp to handle using the two screws provided with the handle (see ***Figure 2***).
7. Operate handle mechanism to ensure functionality. To operate either close door or defeat door interlock.
8. If minor adjustments are necessary, refer to adjustment checklist (page 2-450).
9. Install appropriate door hardware (supplied).

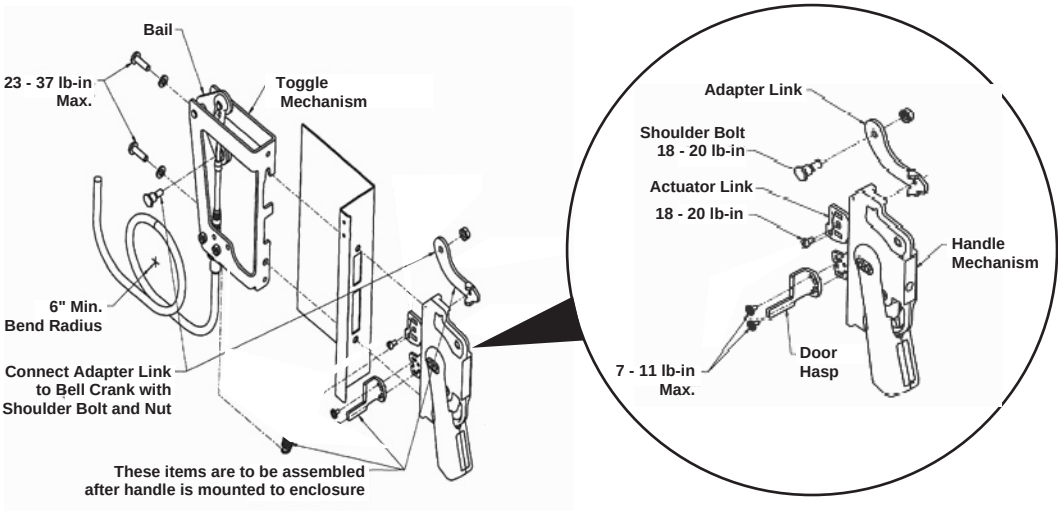

Figure 2 *Securing Toggle Mechanism and Handle to Flange*

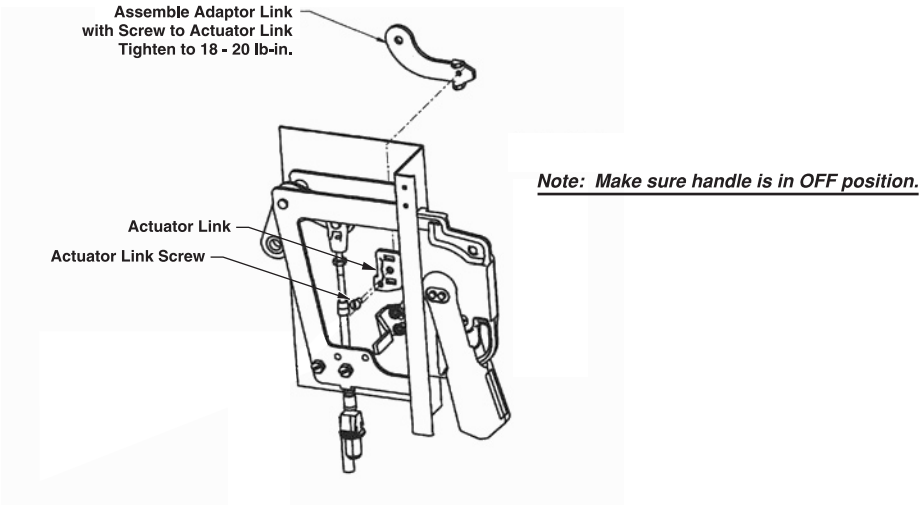

Figure 3 *Assembly of Adapter Link to Actuator Link*

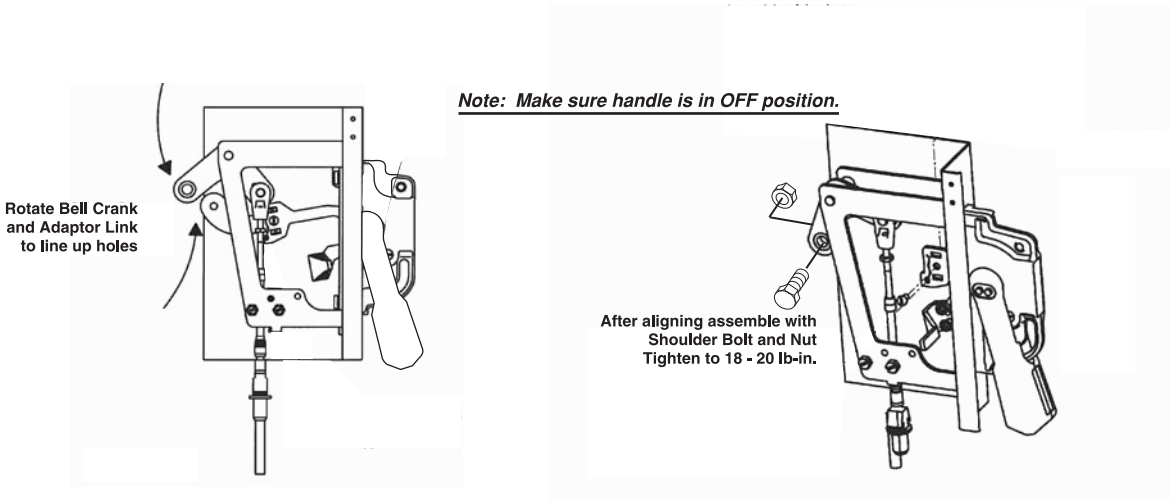

Figure 4 *Assembly of Adapter Link to Bell Crank Using Shoulder Bolt*

ATTENTION

Before any installation or maintenance is performed, make sure that the disconnect switch is not energized.

Adjustment Checklist

Situation:
Handle and Cable Operated Mechanism turns **ON**, but disconnect switch does not transition to **ON**.

Adjustment:
Loosen the lifting washer/nut while tightening the washer/lockwasher/nut, two or three turns should be sufficient (see ***Figure 5***).

NOTICE
Check the OFF position of the actuator mechanism, that the lifting nut and sleeve of cable do not come into contact with the bulkhead connector (***Figure 5***). If they do, move the bulkhead connectors accordingly.

Situation:
Handle and Cable Operated Mechanism turns **OFF**, but disconnect switch does not transition to **OFF**.

Adjustment:
For the Cable Operated Disconnect Mechanism, loosen the washer/lockwasher/nut until the Disconnect Switch turns **OFF** with positive action. Tighten both nuts and recheck for **ON** and **OFF** positions (***Figure 5***).

➲ **NOTICE**
Be certain after adjustment to have a minimum of 1 thread past the washer/lockwasher/nut assembly (***Figure 5***). If any other adjustment problems should arise, contact your local Allen-Bradley representative.

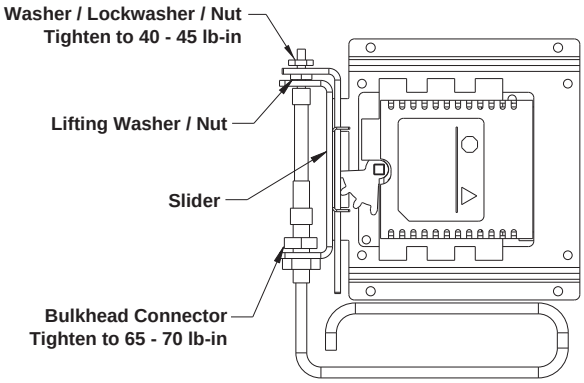

Figure 5 *Cable Operated Disconnect Mechanism*

Dimensions

Dimensions in inches. Dimensions are not intended to be used for manufacturing purposes.

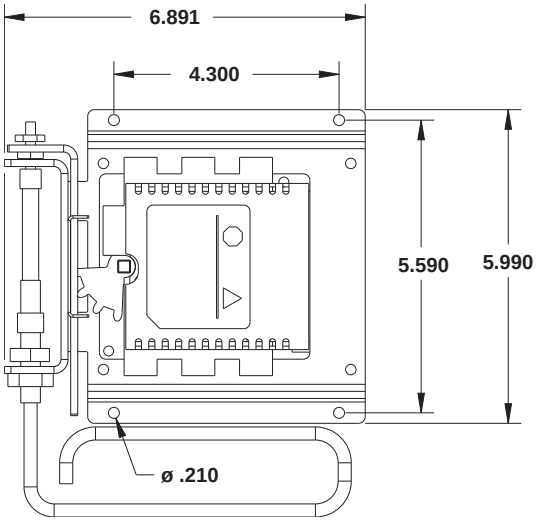

2

Installation Instructions for Door Interlock

Dimensions in inches. Dimensions are not intended to be used for manufacturing purposes.

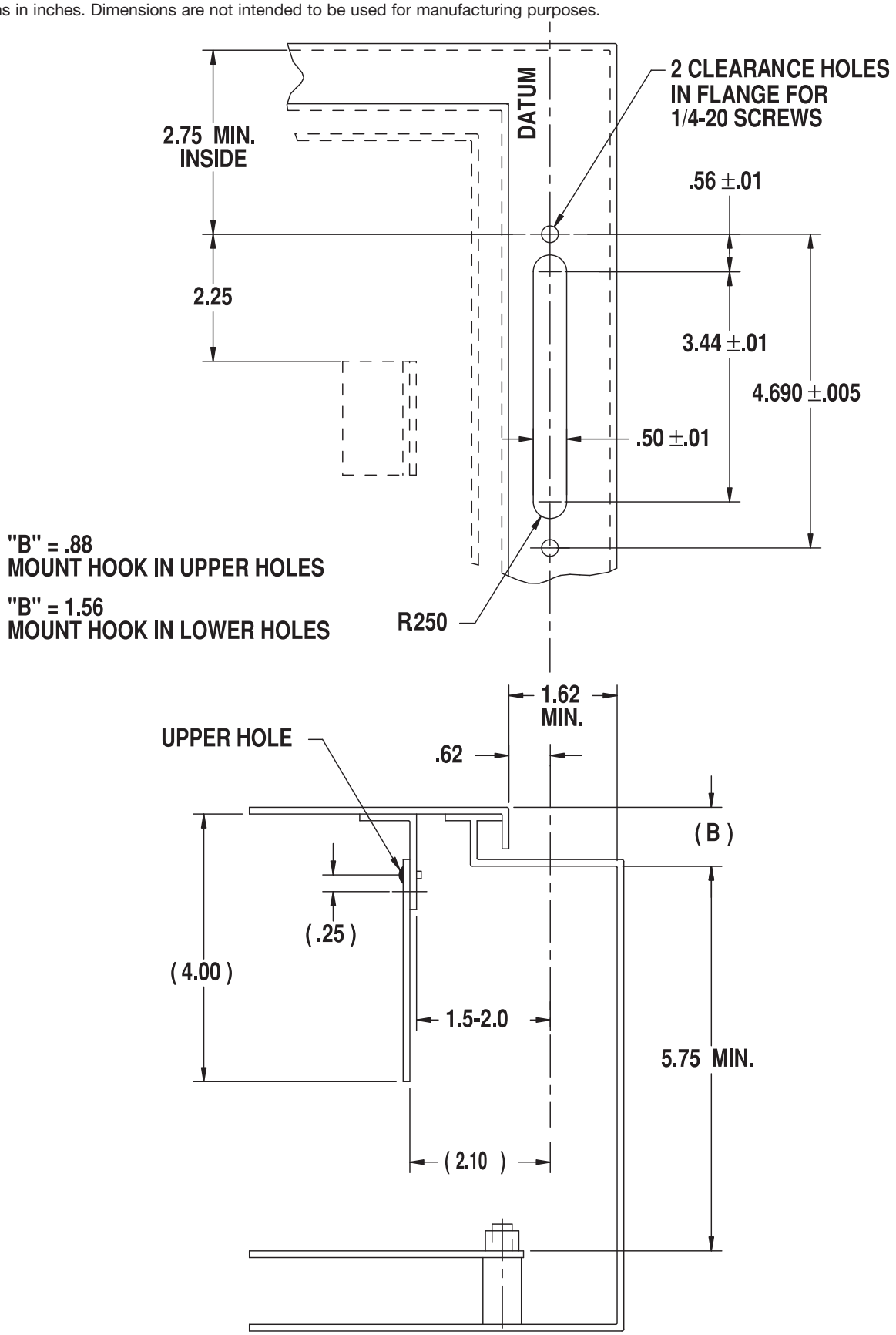

Figure 6 *Flange Drilling Plan for Handle and Interlock Blade Mounting Dimensions*